TOWN OF WELLS, MAINE
PLANNING BOARD

Meeting Agenda
Monday, August 22,2016 7:00 PM
Littlefield Meeting Room, Town Hall
208 Sanford Road

CALL TO ORDER AT 7:00 pm & DETERMINATION OF QUORUM

MINUTES

I. AUGUST 8, 2016 DRAFT MEETING MINUTES

DOCUMENTS:

PB MIN 08-08-16.PDF

PUBLIC HEARING(S)

I. ORDINANCE CHANGE PROPOSAL

I. "An Ordinance to Amend Chapter 145 (Land Use) of the Code of the Town of Wells to permit business uses and related storage to be outside of enclosed structures provided landscaping and buffering requirements are met in the Residential Commercial (RC) District".

DOCUMENTS:

PB MEMO RE ORDINANCE CHG PH 08-19-16.PDF

DEVELOPMENT REVIEW & WORKSHOPS

I. ELMWOOD RESORT

Elmwood Condominium Association, owner; Scott DeFelice, applicant. Site Plan Amendment Application to construct a new entry for the pool building and for after-the-fact approval of various changes made since the 1990 site plan approval. The property is located off of 1351 Post Road and is within the General Business and 75' Shoreland Overlay Districts. Tax Map 129, Lot 35. **Workshop compliance and Findings of Fact & Decisions for possible approval**

DOCUMENTS:

ELMWOOD AMEND APP MEMO 08-17-16.PDF
ELMWOOD DRAFT COMPLIANCE AND FOF 08-08-16.PDF
ELMWOOD REV EC1 08-17-16.PDF
ELMWOOD REV EC2 08-17-16.PDF

II. ROBINSON COMMONS SUBDIVISION

Craig Robinson; owner/applicant. BH2M, engineer. Final Subdivision Amendment Application to amend the "no-cut buffer along Lindsey Road, to propose a re-

planting of the buffer and to amend the driveway locations onto Lindsey Road. The subdivision is located within the Residential A District and is located off of Lindsey Road and Sanford Road. Tax Map 49, Lot 13. **Receive Subdivision Amendment, determine a site walk, workshop completeness if appropriate**

DOCUMENTS:

ROBINSON COMMONS AMD FINAL APP MEMO 08-18-16.PDF
ROBINSON AMD COMPLETENESS DRAFT 08-18-16.PDF
ROBINSON COMMONS AMD DRAFT COMPLIANCE AND FOF 08-18-16.PDF
APPLICATION SIGNED.PDF
ROBINSON COMMONS AMD PLAN 08-15-16.PDF

III. WIRE ROAD SUBDIVISION

Highpine Properties, LLC, owner/applicant. Attar Engineering, Inc. agent. Final Subdivision Application for a major subdivision consisting of 40 lots/ single family dwelling units on 100 acres of land (Residential Cluster Development) with private roadways and infrastructure. The parcel is located off of Wire Road and is within the Rural District. Tax Map 75, Lot 1. **Workshop peer review, HOA docs, and draft compliance/ draft Final Findings of Fact & Decisions**

DOCUMENTS:

WIRE ROAD FINAL MAJOR APP MEMO 08-18-16.PDF
WIRE ROAD ART VII (145-49) RESIDENTIAL CLUSTER CHECKLIST 08-18-16.PDF
WIRE ROAD FINAL COMPLETNEESS DRAFT 08-18-16.PDF
WIRE ROAD DRAFT COMPLIANCE AND FOF 08-19-16.PDF
HOA MEMO 8-19-16.PDF
WIRE ROAD COST ESTIMATE 08-19-16.PDF
WIRE ROAD JCARLETON MEMO RE RESPONSE 07-21-16.PDF
WIRE ROAD TEMPLATE DEED 08-18-16.PDF
WIRE ROAD COMPARISON DEC MAY 20 WITH AUG 16A.PDF
WIRE ROAD COVENANTS 8 15 16A.PDF
WIRE ROAD BYLAWS 08-18-16.PDF
WIRE ROAD DRAFT FIRE POND EASEMENT 08-18-16.PDF
WIRE ROAD SUBDIVISION HIGHPINE_PROPERTIES_LLC_DEP L26984AN.PDF
WIRE ROAD SUBDIVISION_20160819 FOR REVIEW_2.PDF

IV. ORDINANCE CHANGE PROPOSAL

"An Ordinance to Amend Chapter 145 (Land Use) of the Code of the Town of Wells to permit business uses and related storage to be outside of enclosed structures provided landscaping and buffering requirements are met in the Residential Commercial (RC) District". **Workshop for Board of Selectmen**

DOCUMENTS:

ORDINANCE RC ZONE ENCLOSED STRUC DRAFT 08-17-16.PDF
ORDINANCE CHG MGL MEMO RE RC ZONE OUTDOOR SALES 07-22-16.PDF
RC ZONE MAPS.PDF

OTHER BUSINESS

I. SRC & CEO SITE PLAN REVIEW AND APPROVALS UPDATE

DOCUMENTS:

08-02-16 SRC AGENDA.PDF

TOWN OF WELLS, MAINE
PLANNING BOARD

Meeting Minutes
Monday, August 8, 2016, 7:00 P.M.
Wells Town Hall
208 Sanford Road

CALL TO ORDER AND DETERMINATION OF QUORUM

Chairman Chuck Millian called the meeting to order at 7:00 P.M. Members present: Dennis Hardy, Brian Toomey, Robert Sullivan, Pierce Cole and Charles Anderson. There is a quorum and all members are voting tonight. Staff present: Mike Livingston, Town Engineer/Planner and Meeting Recorder Cinndi Davidson.

MINUTES

July 25, 2016

MOTION

Motion by Mr. Sullivan, seconded by Mr. Anderson, to approve the minutes as written. **PASSED** 5-0-1 with Mr. Cole abstaining.

PUBLIC HEARING

I. **MEETINGHOUSE ROAD SUBDIVISION –** Richard Moody & Sons Construction Co, LLC, owner/applicant. Rick Licht, agent. Preliminary Subdivision Application for a 13 lot/dwelling unit major residential cluster subdivision with private road ROW and Open Space. The subdivision to be located off of 1321 Meetinghouse Road and is within the Rural District. The parcel is identified as Tax Map 77, Lot 22.

John Moody, applicant, and Rick Licht of Licht Environmental Design LLC presented the plan for a 13 lot residential cluster subdivision with a private road. The wetlands have been mapped and the vernal pools are not significant. The ACE permit has been issued and the DEP permit is pending. The lots will have individual wells and septic systems. Lot 13 is the only lot with the driveway off Meetinghouse Road rather than off the private road. The utility lines will be underground from Meetinghouse Road. The requirement is 35% open space; this project will have about 57% open space.

Public comment was solicited. There was a question about plants and animals on the property. Previous studies in this area found no rare or endangered species and there was no indication for a formal study. Joe Noel's study didn't disclose anything significant.

MOTION

Motion by Mr. Sullivan, seconded by Mr. Anderson, to close the public hearing. **PASSED** unanimously.

DEVELOPMENT REVIEW & WORKSHOPS

I. **COULSON FARM SUBDIVISION –** Sebago Real Estate Investment LLC, applicant; David & Patricia Coulson, owners. Corner Post Land Surveying, surveyor. Subdivision Pre-Application for a 11 lot/dwelling unit residential cluster major subdivision with private roadway and open space. Parcel is located within the Residential A, 250' Shoreland Overlay, and Resource Protection Districts. Parcel is located off of 227 Branch Road and is identified as Tax Map 56, Lot 25. **Report results of Site Walk**

Applicant Paul Hollis was present. Mr. Livingston reported on the site walk which Mr. Anderson, Mr. Hardy and Mr. Raftopoulos attended. Abutters have expressed concerns about blasting. Mr. Hollis has said that he will handle all the blasting; there will be a pre-blast survey and blasting monitoring and insurance. Some branches need to be trimmed for better sight distance on Route 9A. Mr. Hollis will be meeting with the Fire Chief to discuss a fire pond or other fire protection. The existing skating pond at the Recreation Center is about ½ mile away.

II. **MEETINGHOUSE ROAD SUBDIVISION –** Richard Moody & Sons Construction Co, LLC, owner/applicant. Rick Licht, agent. Preliminary Subdivision Application for a 13 lot/dwelling unit major residential cluster subdivision with private road ROW and Open Space. The subdivision to be located off of 1321 Meetinghouse Road and is within the Rural District. The parcel is identified as Tax Map 77, Lot 22. **Workshop Preliminary Findings of Fact & Decisions for possible approval**

The recommendations in Mr. Livingston's memo were discussed. Abutters had been concerned about headlights coming from the new road. The entrance road has been shifted 20-25' so it lines up with the property line and no house is directly opposite the road. Buffering and screening for the abutters were considered. Part of the area will be left as a field. Mr. Licht said the open space will be no less than 50'; forest management practices will be permitted and there will be a trail system maintained by the HOA. The road name approval and map/lot numbers will be obtained from the Assessor's office prior to final approval. The Findings of Facts & Decisions §202-8 with 3 standard conditions of approval and 1 special condition of approval were reviewed.

MOTION

Motion by Mr. Sullivan, seconded by Mr. Anderson, to approve the Preliminary Findings and sign them at the end of the meeting. **PASSED** unanimously. The applicant has 6 months to submit a final application.

III. **ELMWOOD RESORT -** Elmwood Condominium Association, owner; Scott DeFelice, applicant. Site Plan Amendment Application to construct a new entry for the pool building and for after-the-fact approval of various changes made since the 1990 site plan approval. The property is located off of 1351 Post Road and is within the General Business and 75' Shoreland Overlay Districts. Tax Map 129, Lot 35. **Workshop compliance and Findings of Fact & Decisions for possible approval**

The applicant is revising the plan. A 60 day extension was granted at the last meeting.

IV. BRACKETT ESTATES SUBDIVISION – Jefferson Homes, Inc. owner; Civil Consultants, agent/engineer. Final Subdivision Amendment Application to amend the septic system locations of lots 5-6, 5-9, and 5-24 and to amend the well locations of lot 5-6 and 5-10. The existing major residential cluster development subdivision is located off of Loop Road/ Brackett Lane and Rose Way. The subdivision is located within the Residential A District and is identified as Map 25, Lot 5-1 to 5-29. **Receive Subdivision Amendment Application, determine if a site walk is appropriate, workshop completeness, determine if a public hearing is required, workshop compliance/ draft Findings of Fact & Decisions is appropriate**

Mr. Cole is an abutter and recused himself.

MOTION

Motion by Mr. Sullivan, seconded by Mr. Anderson, to receive the subdivision amendment application. **PASSED** unanimously by those voting.

Tom Harmon of Civil Consultants represented the applicant. This application is to amend some well and septic system locations where ledge was found in the previously approved areas. Mr. Livingston has seen the lots and the subdivision is in its final phase.

MOTION

Motion by Mr. Sullivan, seconded by Mr. Anderson, to waive the requirement for a site walk. **PASSED** unanimously by those voting.

MOTION

Motion by Mr. Sullivan, seconded by Mr. Anderson, to find the application complete. **PASSED** unanimously by those voting.

The developer still owns the lots and the proposed changes are internal to the subdivision.

MOTION

Motion by Mr. Sullivan, seconded by Mr. Anderson, to waive the requirement for a public hearing. **PASSED** unanimously by those voting.

The Findings of Facts & Decisions with §202-12A-H, §202-13, §202-2, 6 standard conditions of approval and 1 special condition of approval were reviewed.

MOTION

Motion by Mr. Sullivan, seconded by Mr. Anderson, to approve the Findings as written and sign the plans and Findings at the end of the meeting. **PASSED** unanimously by those voting.
Mr. Cole returned to the Board.

MOTION

Motion by Mr. Sullivan, seconded by Mr. Cole, to take the next item out of order. **PASSED** unanimously.

OTHER BUSINESS

~Sunrise Terrace Subdivision-Null & Void workshop

Applicant Tim Darling was present. Mr. Livingston noted that a substantial amount of work was done even before the subdivision was approved, as the owner had plans for future development. There has been additional construction since the approval: two manholes, the sewer line and the model home. A portion of the road has been paved. Mr. Livingston considers the work done since approval as "substantial." There are some stockpiles of material on site for the future road base. Mr. Livingston and Mr. Darling concurred that about 20-25% of the construction was completed in the past 5 years. Mr. Livingston said if the Board agrees with "substantial commencement" the subdivision would be grandfathered forever.

MOTION

Motion by Mr. Sullivan, seconded by Mr. Cole, to find that the applicant has made a substantial start on this project. **PASSED** unanimously.

ORDINANCE CHANGE PROPOSAL

This change was proposed by a property owner who repairs vehicles. He would like to be able to sell the vehicles abandoned by his clients and recover his payment. In the RC zone those vehicles would have to be in an enclosed structure. There are only 4 service facilities in the RC zone that existed on January 1, 2016 and would be affected by this change. The Selectmen have sent this to the Planning Board for review, and decided that this change is worthy of being a ballot item in November. The consensus was to remove the date and allow any new businesses in the area to take advantage of the change. Another comment was to eliminate the requirement for an enclosed structure and replace it with screening and landscaped buffering. The Board agreed with the wording changes proposed by Mr. Livingston.

MOTION

Motion by Mr. Sullivan, seconded by Mr. Anderson, to forward the language as amended to the Selectmen for their August 16 meeting and to conduct a public hearing at the August 22 Planning Board meeting. **PASSED** unanimously.

OTHER BUSINESS

~The August 2 SRC agenda is in tonight's packets.

ADJOURN

MOTION

Motion by Mr. Sullivan, seconded by Mr. Cole, to adjourn and sign plans and Findings. **PASSED** unanimously.

MINUTES APPROVED _____, 2016

ACCEPTED BY:

_____ _____

Robert Sullivan, Secretary Cinndi Davidson, Recorder

TOWN OF WELLS, MAINE
PLANNING BOARD

To: Town of Wells Planning Board

From: Planning Office

Date: August 19, 2016

Re: Ordinance Change Proposal - Public Hearing – Residential Commercial District proposal to eliminate the requirement for enclosed structures for business uses.

The Planning Office has not received any public comments regarding the proposed change to the Residential Commercial District.

Thank you.

Planning & Development
208 Sanford Road, Wells, Maine 04090
Phone: (207) 646-5187, Fax: (207) 646-7046
Website: www.wellstown.org

Michael G. Livingston, Town Engineer/Planner	*mlivingston@wellstown.org*
Shannon M. L. Belanger, Planning Assistant	*sbelanger@wellstown.org*

Site Plan Amendment Application Memo

Date: August 17, 2016

To: Planning Board

From: Planning Office

Re: Elmwood Resort – Site Plan Amendment Application - Map 129, Lot 35

Scott Defelice, on behalf of the Elmwood Condominium Association, has submitted a site plan amendment application for the Elmwood Resort located off of 1351 Post Road identified as Tax Map 129, Lot 35. The property is located within the General Business District and 75' Shoreland Overlay District and is 3.35 acres in size. The site plan amendment application is seeking approval for a new 5' x 7' entry to the pool building, a deck addition and after the fact approval for various changes made since the 1990 site plan approval including: A deck, stairs and landscaped area around the indoor pool building, an altered outdoor pool apron and new pool shed; expanded parking area (no retaining wall) to the south of the office building, altered stairway locations into the motel buildings, relocated dumpsters, a picnic and playground area, and eliminated parking islands. No changes are proposed to the existing 77 motel units (119 bedrooms), the office unit, the storage unit, the laundry room unit, or the Manager's Quarters which obtained Zoning Board of Appeals approval in 1997. The parcel is served by public sewer and public water.

§ 145-70. Applicability.

All uses identified as permitted with site plan approval in Article V shall be subject to the requirements of this article in the following situations:

A. A new use is proposed on a lot;

B. Resumption of a use which has been discontinued for at least two years is proposed; or

C. An existing use proposes to expand its gross floor area and/or land area. **YES – new SF is proposed for the pool area and new SF is involved with the after-the-fact approval of the various changes made since 1990**

§ 145-71. Reviewing authority. [Amended 4-19-1997]

A. The reviewing authority for uses or structures requiring site plan review under Article V shall be determined by the Reviewing Authority Chart. Editor's Note: The Reviewing Authority Chart is included at the end of this chapter. **[Amended 4-18-1998]** **The amendments sought requires Planning Board approval.**

B. If a particular reviewing authority is set forth in sections of the Wells Municipal Code other than Subsection A of this section for a particular use, structure or procedure that conflicts with the above chart, such other sections of the Code will control with respect to the proper review authority.

§ 145-72. Applications. [Amended 4-26-1996]

Appropriate application forms shall be available from the Office of Planning and Development. All applications shall be filed with the Office of Planning and Development, and the application fee shall be paid to the Town of Wells.

§ 145-73. Fees.

A. An application fee as established by the Board of Selectmen, following notice and a public hearing, shall be paid at the time an application is filed. **Applicant submitted and application fee and escrow deposit.**

B. The applicant shall reimburse the Town for all expenses incurred for notifying abutters of the proposed site plan and advertising of any public hearing regarding the site plan.

C. The Town staff or Planning Board may employ the services of technical experts to assist it in reviewing applications and in determining appropriate conditions of approval. The applicant shall be informed of the intended use of such services and their approximate cost. A deposit equal to the estimated cost shall be paid to the Town prior to the employment of any such technical experts. The total cost of any such review shall be paid by the applicant prior to the signing of any approved plans. If the entire deposit is not expended, the remaining balance shall be returned to the applicant. **[Amended 4-26-1996; 11-7-2000]**

§ 145-74. Review and approval process.

G. Amendment to approved site plans.

(2) Upon receipt of an application to amend a previously approved site plan, the Code Enforcement Officer shall follow the procedure for reviewing a site plan review preapplication as set forth in Subsection A. Notice of the filing of an application to amend an approved site plan shall follow the notice procedure for the filing of a preapplication for site plan review as set forth in Subsection A. **Procedure for site plan pre-application and application shall be followed. ***

(3) The procedure for reviewing applications to amend a previously approved site plan shall follow the procedure for reviewing a site plan review application as set forth in this section unless the reviewing authority determines that the amendment is of such an inconsequential nature that the full site plan review procedure is not necessary. For applications to amend a previously approved site plan, the reviewing authority may combine the preapplication and application steps and may waive the requirement for a public hearing.

(4) Field changes to approved site plans. **[Added 4-18-1998]** **Not applicable at this time**

H. The Planning Board may require that a performance bond or other suitable financial guaranties be posted by the applicant. The form and amount of this bond of financial guaranty must be acceptable to the Town Manager. **Not applicable**

I. Technical assistance. The Code Enforcement Officer, the Staff Review Committee or the Planning Board may, at its discretion, forward a copy of the application, the plans and all supporting documentation to any appropriate technical expert for review. The review may include traffic impact, roadway and parking area design and construction, stormwater management and erosion and sedimentation control, as well as any other concerns of the reviewing authority. The applicant shall pay for the employment of any such experts. (See § 175-73C.) **Not applicable**

A. Preapplication. **[Amended 4-14-2000]** *

(1) Prior to submitting an application, the applicant shall submit to the Office of Planning and Development a preapplication form, sketch plan of the subject property showing existing and proposed buildings, parking areas, lot boundaries, adjacent streets, entrances to the property, water bodies, any other significant features **Plan provided**, a list of names and addresses of abutters to the proposed project **Provided**, and a set of Size 10 envelopes addressed to the abutters **Provided**, affixed with first class postage. The addresses of these abutters shall be obtained from the Town of Wells Tax Assessor's records. Within seven days of receipt of a preapplication by the Office of Planning and Development, the Code Enforcement Officer shall:

(a) Determine the level of review to be required under § 14-71 and whether or not the proposed use is a permitted use on the subject lot. **On 2/11/16 the Code Officer determined the uses are permitted.**

(b) If the proposed use is a permitted use on the subject lot: **Abutter notification mailed 2/12/16**

[1] Send or deliver a notice to the applicant and the abutters of such determinations by first class mail. **YES**

[2] Certify that said notices have been sent or delivered.

[3] If the reviewing authority pursuant to § 145-71 is the Code Enforcement Officer, indicate to the applicant the information the applicant needs to submit as part of the application. **Not applicable**

[4] If the reviewing authority pursuant to § 145-71 is the Staff Review Committee or the Planning Board, place the applicant on the next available agenda for a preapplication meeting, if a preapplication meeting is requested by the applicant. **Planning Board received site plan amendment application on 2/22/16**

(c) If the proposed use is not a permitted use on the subject lot, send a notice to the applicant of such determination by first class mail and certify that said notice has been sent.

(2) The abutters' notification sent pursuant to Subsection A(1)(b)[1] above shall include a copy of the preapplication form and an explanation of the purpose of the notification. **YES** If the reviewing authority is the Staff Review Committee or the Planning Board and a preapplication meeting with the Committee or Board is requested by the applicant, the preapplication meeting date shall also be included in the notification **YES**, and said notification shall be sent or delivered by first class mail at least 10 days before the meeting. **Abutter notification mailed on 2/12/16; meeting was on 2/22/16**

(3) The Staff Review Committee or the Planning Board at its preapplication meeting with the applicant shall indicate the information which the applicant will be required to submit as part of the application and may schedule an on-site inspection of the property. The Committee or Board may waive any of the submission requirements listed in § 145-77 if it determines that they would not be applicable or are not necessary to determine that the standards of § 145-75 have been or will be met. **To be determined**

(4) If the applicant does not request a preapplication meeting with the Staff Review Committee or the Planning Board the applicant is encouraged to meet with the Director of Planning and Development to discuss the project and the information the applicant will be expected to submit as part of the application.

Recommendations and Conclusion:

1. The Planning Board should consider and make determinations on the following completeness and compliance items:
    a. Minor plan revisions recommended on sheet EC2 completed.
    b. Parking is depicted on sheet EC1 and described on sheet EC2. The Board should consider and vote to approve the following:
        i. The existing number of spaces as depicted are adequate based on available public transportation (113 spaces provided)
        ii. Several spaces need to be re-striped by 10-1-2016 (see note 16e on sheet 2)
        iii. Several existing spaces are striped with a 13’ depth but maintain a 30’+ aisle width.
    c. Landscaping is depicted and noted on the plans. The Board should consider and vote to approve the following:
        i. The existing Route 1 buffers (15 foot and 60 foot) per 145-38 and 145-52 are grandfathered and found to be adequate.
        ii. The existing buffers and screening per 145-38 and 145-52 along the perimeter of the property are grandfathered and found to be adequate
        iii. The dumpster locations are adequately screened by existing vegetation

   d. A waiver should be considered to not require a capacity letter from the Wells Sanitary District. No change in service since 1997.
   e. A waiver should be considered to not require a capacity letter from the KKW Water District. No change in service since 1997.
2. If the above items are addressed, the Planning Board should consider finding the application complete (145-77) and compliant (145-75).
3. The Planning Board should then consider approving and signing the Findings of Fact & Decisions and site plan.

Town of Wells, Maine
Planning Board

FINDINGS OF FACTS & DECISIONS
Site Plan Amendment Application for "Elmwood Resort"

Chapter 145, Article X
Site Plan Approval

PROJECT INFORMATION		
General:	**Project Name:**	Elmwood Resort
	Applicant:	Scott Defelice,Elmwood Condominum Association, 1351 Post Rd, Wells, ME 04090
	Landowner:	Elmwood Condominum Association, 1351 Post Rd, Wells, ME 04090
	Location:	1351 Post Rd, Wells, ME
	Existing Use:	77 unit Hotel/Motel Lodging Facility
	Proposed Land Use:	77 unit Hotel/Motel Lodging Facility
	Tax Parcel ID:	Map 129, Lot 35
	Zoning District:	General Business and 75' Shoreland Overaly Districts
	Art VII Performance Standards:	§145-52. Lodging Facility
	Design Engineer:	Civil Consultants, PO Box 100, S. Bertwick, ME 03908
	Plan Submission Date:	Februray 9, 2016
Project Description:	Scott Defelice, on behalf of the Elmwood Condominium Association, has submitted a site plan amendment application for the Elmwood Resort located off of 1351 Post Road identified as Tax Map 129, Lot 35. The property is located within the General Business District and 75' Shoreland Overlay District and is 3.35 acres in size. The site plan amendment application is seeking approval for a new 5' x 7' entry to the pool building, a deck addition and after the fact approval for various changes made since the 1990 site plan approval including: A deck, stairs and landscaped area around the indoor pool building, an altered outdoor pool apron and new pool shed; expanded parking area (no retaining wall) to the south of the office building, altered stairway locations into the motel buildings, relocated dumpsters, a picnic and playground area, and eliminated parking islands. No changes are proposed to the existing 77 motel units, the office unit, the storage unit, the laundry room unit, or the Manager's Quarters which obtained Zoning Board of Appeals approval in 1997. The parcel is served by public sewer and public water.	
Completeness Determination:	08/08/2016	
Public Hearing:	Waived	

Town of Wells, Maine
Planning Board

FINDINGS OF FACTS & DECISIONS
Site Plan Amendment Application for "Elmwood Resort"

Staff Review Mtg:	None

PROJECT HISTORY

1. On 2/9/16 the applicant submitted a site plan amendment application to the Planning Office.
2. On 2/11/16 the Code Officer found the use proposed to be permitted in the General Business District.
3. On 2/12/16 the Planning Office mailed notice to abutters of the Code Officer use determination and of the 2/22/16 Planning Board meeting.
4. On 2/18/16 the Planning Office prepared a site plan amendment application memo for the applicant and Planning Board.
5. On 2/22/16 the Planning Board received the site plan amendment application and scheduled a site walk of the property for 3/5/16 at 9 AM.
6. On 3/5/16 the Planning Board conducted a site walk of the property.
7. On 3/7/16 the Town Engineer/Planner prepared a site walk results memo.
8. On 3/7/16 the Planning Board reported the results of the site walk.
9. On 5/5/16 the Planning Office received an as-built plan draft from the applicant.
10. On 5/31/16 the Planning Office prepared the Article V, VI, VII and draft completeness checklists and a memo for the applicant and Planning Board.
11. On 6/6/16 the Planning Board reviewed the draft as-built plan and voted to continue the workshop for 30 days.
12. On 6/8/16 the Fire Chief prepared a letter to the Planning Office regarding Elmwood Resort.
13. On 7/6/16 the applicant met with the Planning Office to go over the site plan recommended changes and notes and results of research found from the Code Office.
14. On 7/20/16 Planning Office received revised plans from the applicant for review.
15. On 7/21 and 7/22/16 the Planning Office prepared updated Article V, VI, VII and draft completeness review checklists and memo for the Planning Board and applicant.
16. On 7/25/16 the Planning Board was scheduled to workshop the amendment application. The applicant did not attend the meeting. The Planning Board voted to waive the public hearing and voted to continue the workshop for 60 days.
17. On 8/4/15 the Planning Office received revised site plans for review.
18. On 8/5/16 the Planning Office prepared updated Article V, VI, VII and draft completeness review checklists. A draft compliance (145-75)/ Findings of Fact & Decisions and memo were also prepared.
19. On 8/8/16 the applicant requested more time to work with his engineer on addressing recommended plan changes.
20. On 8/17/16 the Planning Office received revised plans.
21. On 8/17/16 the Planning Office prepared an updated compliance/ Findings of Fact & Decisions document and memo for the Planning Board.
22. On 8/22/16 the Planning Board voted to find the application complete, made various determinations regarding buffering, landscaping, parking, water and sewer letters, etc. The Planning Board voted to find the application compliant (145-75). The Planning Board voted to approve and sign the Findings of Fact & Decisions and site plan.

§ 145-75. Criteria and Standards	Comments
The following standards shall be applied to all applications for site plan approval. These standards are intended to provide a frame of reference for the applicant in the development of his plans and a method of review. These standards shall be applied reasonably and fairly, when applicable, taking into account any extenuating circumstances or special features of the property or its neighborhood.	

§ 145-75. Criteria and Standards		Comments
A.	**Traffic.** The proposed development shall provide for safe access to and from public and private roads. Safe access shall be assured by providing an adequate number of exits and entrances that have adequate sight distances and do not conflict with or adversely impact the traffic movements at intersections, schools and other traffic generators. Curb cuts shall be limited to the minimum width necessary for safe entering and exiting. The proposed development shall not have an unreasonable adverse impact on the Town road system and shall provide adequate parking and loading areas. No use or expansion of a use shall receive site plan approval if any parking spaces are located in a public right-of-way or if any travel lane of a state number highway is used as part of the required aisle to access any parking spaces.	**BASED ON THE FOLLOWING, THE PLANNING BOARD FINDS THAT THIS STANDARD SHALL REMAIN MET.** Site plan depicts 151.54' of street frontage along Route One. See note 10. Parcel does not have multiple street frontages. Plan note 15 state parking on Route 1 is prohibited. 90 degree parking spaces should be 9' x 18.5' with 26' wide aisles. Prior site plan approval has various 'compact car' parking spaces and altering space dimensions and aisle widths. (95 regular and 24 compact noted on prior approved plans). The property is grandfathered with regarding to parking. See note 16 on sheet EC2. Based on the total required / provided parking spaces 131 x .04 = 6 handicap accessible spaces required. 113 spaces exist requiring 5 handicap spaces. 5 handicap accessible spaces are labelled on the site plan. See note 16b. Snow storage areas are depicted on the plan. Areas that could be used for parking shall be on pavement or gravel as depicted on the plan. Parking lot re-stripping to occur per note 16e. See note 16a. There are 119 bedrooms x 1.1 = 131 parking spaces. Prior approved parking total was 119. Parcel provides 113 parking spaces and requests a reduction in required parking based on public transportation (trolley stop) provided at the front of the lot. Planning Board granted parking space reduction on 8/22/16. Parking areas have existed for over ten years with no indication of erosion/sedimentation of the brook. Thick vegetation exists as a buffer. No change is proposed to runoff. Site distances onto Route 1 are noted to be sufficient. Speed limit of Route 1 is noted to be 35 MPH. No change to entrance/exit proposed. No change in use or traffic is proposed.

§ 145-75. Criteria and Standards		Comments
	fumes, vapors or gases which could damage human health, animals, vegetation or property or which could soil or stain persons or property, at any point beyond the lot line of the commercial or industrial establishment creating that emission, shall be prohibited.	
B.	**Dust, fumes, vapors and gases.** Emission of dust, dirt, fly ash, fumes, vapors or gases which could damage human health, animals, vegetation or property or which could soil or stain persons or property, at any point beyond the lot line of the commercial or industrial establishment creating that emission, shall be prohibited.	**BASED ON THE FOLLOWING, THE PLANNING BOARD FINDS THAT THIS STANDARD SHALL REMAIN MET.** The parcel is prohibited from emitting dust, fumes, vapors or gases at any point beyond its lots lines.
C.	**Odor.** No land use or establishment shall be permitted to produce offensive or harmful odors perceptible beyond its lot lines, measured either at ground or habitable elevation.	**BASED ON THE FOLLOWING, THE PLANNING BOARD FINDS THAT THIS STANDARD SHALL REMAIN MET.** The parcel is prohibited from producing such odor at any point beyond its lot lines as measured at ground or habitable elevation.
D.	**Glare.** No land use or establishment shall be permitted to produce a strong, dazzling light or reflection of that light beyond its lot lines onto neighboring lots or onto any Town way so as to impair the vision of the driver of any vehicle upon that Town way.	**BASED ON THE FOLLOWING, THE PLANNING BOARD FINDS THAT THIS STANDARD SHALL REMAIN MET.** See note 14 on sheet EC2. This parcel is prohibited from producing such glare onto abutting lots or street right of ways. All existing and proposed exterior lights shall be downward directional and comply with Land Use lighting provisions.

§ 145-75. Criteria and Standards			Comments
E.	**Stormwater runoff.** Surface water runoff shall be minimized and detained on site if possible or practicable in accordance with Chapter 202-12F(4) General Standards of the Wells Subdivision Ordinance (wherein the word "site plan" shall be substituted for "subdivision"). If it is not possible to detain water on site, downstream improvements to the channel may be required of the developer to prevent flooding which would be caused by his project. The natural state of watercourses, swales, floodways or rights-of-way shall be maintained as nearly as possible. **[Amended 4-27-2007]**		**BASED ON THE FOLLOWING, THE PLANNING BOARD FINDS THAT THIS STANDARD SHALL REMAIN MET.** Parking areas have existed for over ten years with no indication of erosion/sedimentation of the brook. Thick vegetation exists as a buffer. No change is proposed to runoff.
F.	**Erosion control.** Erosion of soil and sedimentation of watercourses and water bodies shall be minimized by employing the following best-management practices: **[Amended 4-27-2007]**		**BASED ON THE FOLLOWING, THE PLANNING BOARD FINDS THAT THIS STANDARD SHALL REMAIN MET.** Best Management Practices are a standard condition of approval. See note 19 on sheet EC2.
	(1)	Stripping of vegetation, soil removal and regrading or other development shall be accomplished in such a way as to minimize erosion.	
	(2)	The duration of exposure of the disturbed area shall be kept to a practical minimum.	
	(3)	Temporary vegetation and/or mulching shall be used to protect exposed critical areas during development.	
	(4)	Permanent (final) vegetation and mechanical erosion control measures in accordance with the standards of the York County Soil and Water Conservation District or the Maine Soil and Water Conservation Commission shall be installed as soon as practicable after construction ends.	

§ 145-75. Criteria and Standards			Comments
	(5)	Until a disturbed area is stabilized, sediment in runoff water shall be trapped by the use of debris basins, silt traps or other acceptable methods as determined by the reviewing authority.	
	(6)	The top of a cut or the bottom of a fill section which alters the existing grade by more than two feet shall not be closer than 10 feet to an adjoining lot.	
	(7)	During grading operations, methods of dust control shall be employed.	
	(8)	The proposed site plan shall prevent soil erosion and sedimentation from entering waterbodies, wetlands, and adjacent properties.	
	(9)	The procedures outlined in the erosion and sedimentation control plan shall be implemented during the site preparation, construction, and clean-up stages.	
	(10)	Cutting or removal of vegetation along waterbodies shall not increase water temperature or result in shoreline erosion or sedimentation.	
	(11)	Topsoil shall be considered part of the site plan and shall not be removed from the site except for surplus topsoil from roads, parking areas, and building excavations.	

§ 145-75. Criteria and Standards		Comments
G.	**Setbacks and screening.** Parking and loading areas, exposed storage areas, exposed machinery installation and areas used for the storage or collection of discarded automobiles, auto parts, metals or any other articles of salvage or refuse shall have sufficient setbacks and screening to provide a visual buffer sufficient to minimize their adverse impact on the surrounding lots. Where a potential safety hazard to children would be likely to arise, physical screening sufficient to deter small children from entering the premises shall be provided and shall be maintained in good condition.	**BASED ON THE FOLLOWING, THE PLANNING BOARD FINDS THAT THIS STANDARD SHALL REMAIN MET.** See note 10. Parcel is not within 200 feet from the high-water line of the Merriland River, the Webhannet River and the Ogunquit River. This existing commercial property abuts another commercial to the north/east. Residential abutters to the north/west and south exist. A screen is not required along the northerly or easterly boundaries with Village by the Sea. On 8/22/16 the Planning Board reviewed the screening provided along the westerly and southerly lot lines based on the pool shed, expanded parking area, dumpster location, playground, and proposed expanded indoor pool building deck. Significant vegetation exists from 20 to 75 feet wide from the southerly lot line. Screening found to be sufficient as it exists. On 8/22/16 the Planning Board found existing screening for the residential abutters to remain adequate. The parcel has street frontage along Route One. The plan shows a shrub, conifer tree and arborvitae trees planted in portions of the 15' landscaped buffer. On 8/22/16 the Planning Board found the existing landscape buffer along Route One is adequate. See 145-52 landscape buffer/setback requirements as well. The Route One 60 foot buffer consists of trees, shrubs, plantings, grass, etc. The buffer also includes an existing outdoor pool and is seeking after the fact approval for a pool shed. On 8/22/16 the Planning Board found the Route 1 60' wide buffer that exists sufficient and grandfathered. On 8/22/16 the Planning Board reviewed the 25' buffer requirements. An access road doesn't exist. A pathway to the Village by the Sea Lot, a playground, portions of a parking lot and projector/patio area exist within the buffer. The existing buffer is sufficient and grandfathered as it exists.

§ 145-75. Criteria and Standards		Comments
	they are stored in compliance with the requirements of the National Fire Protection Association (NFPA) standards.	
H.	**Explosive materials.** No highly flammable or explosive liquids, solids or gases shall be stored in bulk above ground, unless they are stored in compliance with the requirements of the National Fire Protection Association (NFPA) standards.	**BASED ON THE FOLLOWING, THE PLANNING BOARD FINDS THAT THIS STANDARD SHALL REMAIN MET.** No change proposed with regard to storage of fuels. Fuel shall be stored in compliance with NFPA standards. See note on EC2.
I.	**Water quality.** All aboveground outdoor storage facilities for fuel, chemicals, chemical or industrial wastes and potentially harmful raw materials shall be located on reinforced cement and shall be completely enclosed by an impervious dike monolithically poured, which shall be high enough to contain the total volume of liquid kept within the storage area, plus the rain falling into this storage area during a fifty-year storm, so that such liquid shall not be able to spill onto or seep into the ground surrounding the paved storage area. Storage tanks for home heating fuel and diesel fuel, not exceeding 275 gallons in size, shall be exempted from this requirement.	**BASED ON THE FOLLOWING, THE PLANNING BOARD FINDS THAT THIS STANDARD SHALL REMAIN MET.** No change proposed with regard to storage of fuels.

§ 145-75. Criteria and Standards		Comments
J.	**Preservation of landscape.** Unnecessary disturbance of the landscape shall be minimized, insofar as practicable, by minimizing tree removal and any grade changes.	**BASED ON THE FOLLOWING, THE PLANNING BOARD FINDS THAT THIS STANDARD SHALL REMAIN MET.** Prior approve lot coverage was 52.4%. As-built existing coverage is noted to be 56.23%. Proposed lot coverage is noted to be 56.43%. Lot coverage of the Shoreland Overlay zone is noted to be 6.95%. All existing lawn and brush areas shall be maintained. No changes are proposed to existing landscaping/vegetated areas except for the proposed deck addition and after the fact approval of changes made since 1990 site plan approval.
K.	**Refuse disposal.** The applicant shall provide for the disposal of all solid and liquid wastes on a timely basis and in an environmentally safe manner. The review board shall consider the impact of particular industrial or chemical wastes or by-products upon the Wells transfer station (in terms of volume, flammability or toxicity) and may require the applicant to dispose of such wastes elsewhere, in conformance with all applicable state and federal regulations. The board may require the applicant to specify the amount and exact nature of all industrial or chemical wastes to be generated by the proposed operation.	**BASED ON THE FOLLOWING, THE PLANNING BOARD FINDS THAT THIS STANDARD SHALL REMAIN MET.** Two dumpster locations identified on the plan. See note 17 on sheet EC2. Dumpsters shall meet applicable setback requirements and screening requirements.
L.	**Water supply.** The applicant shall demonstrate the availability of adequate water supply for fire protection and the consumption needs of the proposed development.	**BASED ON THE FOLLOWING, THE PLANNING BOARD FINDS THAT THIS STANDARD SHALL REMAIN MET.** On 8/22/16 thePlanning Board granted a waiver and did not require a capacity letter from the KKWWD. No change of use is proposed.

§ 145-75. Criteria and Standards		Comments
	disposal of all wastewaters.	
M.	**Sewage disposal.** The applicant shall provide for the safe disposal of all wastewaters.	**BASED ON THE FOLLOWING, THE PLANNING BOARD FINDS THAT THIS STANDARD SHALL REMAIN MET.** On 8/22/16 thePlanning Board granted a waiver and did not require a capacity letter from the WSD. No change of use is proposed.
N.	**Fire safety.** The site plan shall make adequate provisions for access by fire-fighting equipment and personal.	**BASED ON THE FOLLOWING, THE PLANNING BOARD FINDS THAT THIS STANDARD SHALL REMAIN MET.** The Fire Chief has provided a letter dated 6/8/2016. It is recommended that the existing fire hydrant maintain a 36" clearance around the hydrant for proper access. The facility has an existing knox box.

Standard Conditions of Approval

1. Site Plan approval secured under the provisions of this chapter shall expire within 10 years from the date on which the site plan is signed if all aspects of the site plan approval are not fully completed and established. Any site plan approval may include a phasing plan according to an approved time schedule not to exceed 10 years from the date on which the site plan is signed. Site plan approval shall expire if a use has been established and then discontinued for two years or more. [§145-74F]
2. Approval is conditioned upon compliance by the applicant with the plans and specifications which have been received by the Town in connection with this development proposal.
3. Conditions of approval or notes written on the face of the site plan may be amended only by the reviewing authority that approved the site plan. [§145-74G(1)(b)]
4. Failure to comply with any conditions of approval shall be construed to be a violation of Article X of the Land Use Ordinance and shall be grounds for revoking the approved development plan, initiating legal proceedings to enjoin construction development or any specific activity violating the conditions of plan approval or applying the legal penalties detailed in §145-64. [§145-79A]
5. Whenever sedimentation is caused by stripping vegetation, regrading or other development, it shall be the responsibility of the owner to immediately install sedimentation control devices on his lot and to remove sediment from all adjoining surfaces, drainage systems and watercourses and to repair any drainage, at his expense, as quickly as possible. Any landowner that fails to do so within two weeks after official written notification by the Code Enforcement Officer shall be penalized as set forth in §145-64. [§145-79B]

6. Erosion of soil and sedimentation of watercourses and water bodies shall be minimized by employing the following best-management practices [§145-75F]:
   (a) Stripping of vegetation, soil removal and regrading or other development shall be accomplished in such a way as to minimize erosion.
   (b) The duration of exposure of the disturbed area shall be kept to a practical minimum.
   (c) Temporary vegetation and/or mulching shall be used to protect exposed critical areas during development.
   (d) Permanent (final) vegetation and mechanical erosion control measures in accordance with the standards of the York County Soil and Water Conservation District or the Maine Soil and Water Conservation Commission shall be installed as soon as practicable after construction ends.
   (e) Until a disturbed area is stabilized, sediment in runoff water shall be trapped by the use of debris basins, silt traps or other acceptable methods as determined by the reviewing authority.
   (f) The top of a cut or the bottom of a fill section which alters the existing grade by more than two feet shall not be closer than 10 feet to an adjoining lot.
   (g) During grading operations, methods of dust control shall be employed.
   (h) The proposed site plan shall prevent soil erosion and sedimentation from entering waterbodies, wetlands, and adjacent properties.
   (i) The procedures outlined in the erosion and sedimentation control plan shall be implemented during the site preparation, construction, and clean-up stages.
   (j) Cutting or removal of vegetation along waterbodies shall not increase water temperature or result in shoreline erosion or sedimentation.
   (k) Topsoil shall be considered part of the site plan and shall not be removed from the site except for surplus topsoil from roads, parking areas, and building excavations.
7. The property shown on this plan may be developed and used only as depicted on this approved plan. All elements and features of the plan and all representations made by the applicant in the record of the Planning Board and/or Staff Review Committee proceedings are conditions of the approval. No change from the conditions of approval is permitted unless an amended plan is first submitted to and approved by the Planning Board and/or Staff Review Committee.
8. Approval of the application or amendment application does not relieve the applicant from the responsibility to obtain building permits prior to construction and use permits prior to occupancy.
9. It is the applicant's responsibility to contact Dig Safe prior to construction.
10. It is the owner/Homeowners Association/applicant/developer's responsibility, not the Town Code Office or Town Planning Office, to contact the Town Clerk's Office to apply for and maintain any and all business license(s) for the use(s) conducted on this subdivision/site plan parcel(s).
11. Approval of any proposed field changes shall be obtained prior to construction. Said approvals shall be in writing. The Code Enforcement Office shall consult with the Office of Planning and Development prior to approving any field change.
12. Prior to the pouring of a building footing/foundation, the location of each cottage and/or building to be constructed shall be located on the face of the earth and shall be marked with surveyor pins or stakes. The developer shall receive approval of each cottage and/or building location from the Code Enforcement Office prior to the commencement of footing/foundation excavation.
13. If the property will be converted to a condominium form of ownership, the proposed condominium documents must be presented to the Town for review and approval by the Town Attorney. No use permit shall be issued until the Town Attorney has indicated approval of the condominium documents.
14. Upon completion of construction, the applicant shall provide to the Town record as-built drawings of the roadway, drainage, and utility related construction work.

15. The Town of Wells, Maine may employ the services of an engineering firm to assist in the inspection of roads and other infrastructure if, in the opinion of the Code Enforcement Office, the work necessary to insure compliance with Town ordinances or the requirements of this approval are beyond those capacities available by staff. The cost of such additional services will be born by the developer.
16. All components, features, improvements and conditions of site plan approval shall be fully completed prior to any issuance of a certificate of occupancy.

Special Conditions of Approval

1. All previous Conditions of Approval will remain in effect. The approval of this Amended Site Plan in no way negates the need for applicant compliance with all previously set Conditions of Approval.

Dated at Wells, Maine this _____ day of _____, 2016

Wells Planning Board

By: _____
Charles Millian, Chairman

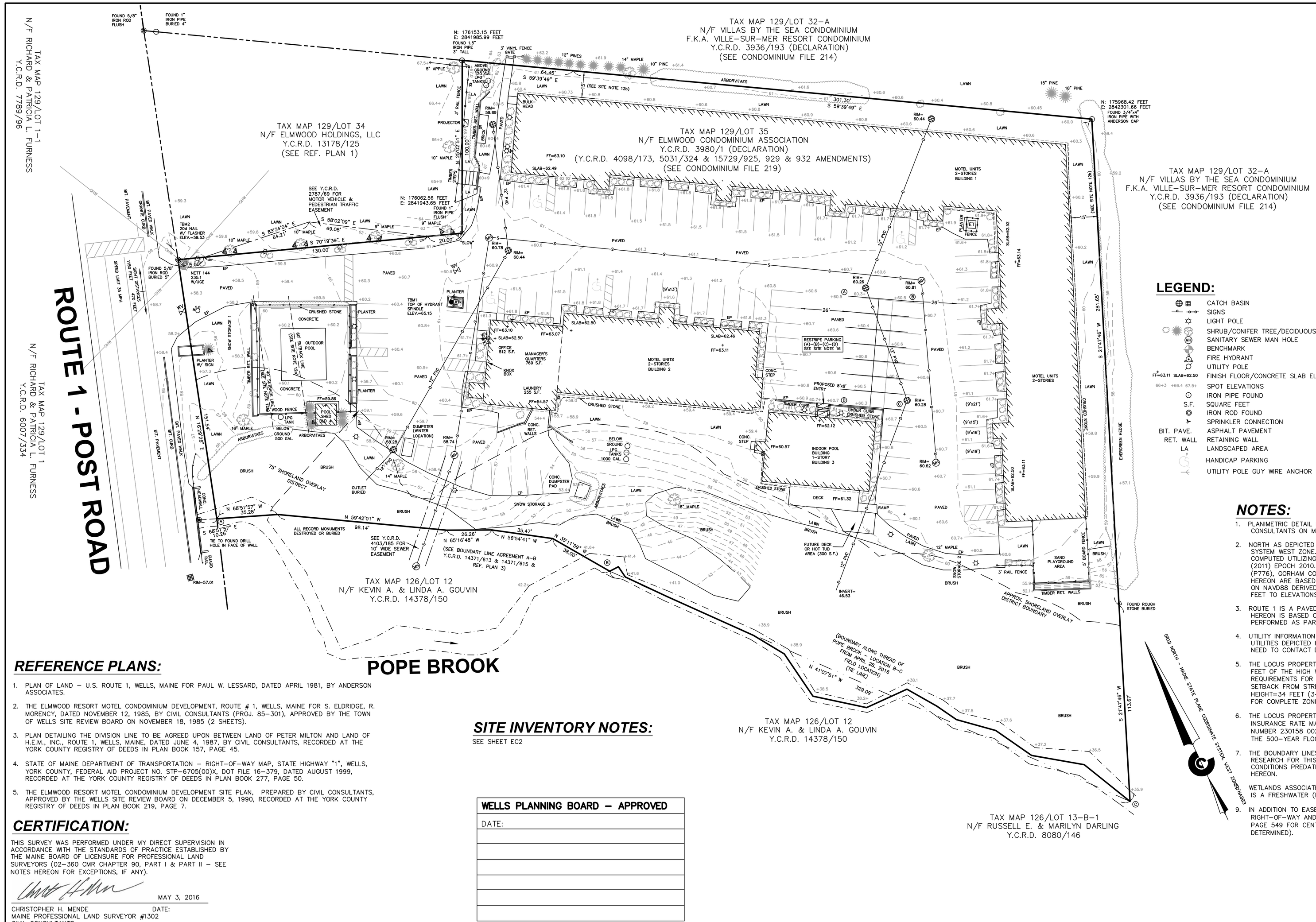

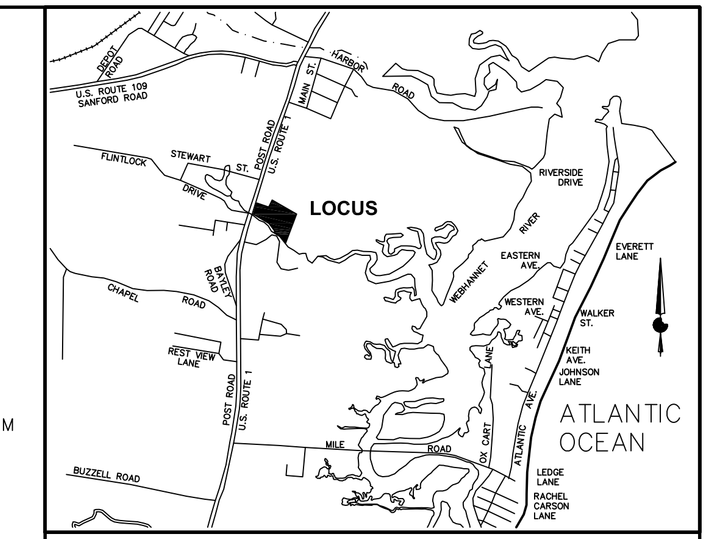

LOCATION PLAN

(NOT TO SCALE)

LEGEND:

- CATCH BASIN
- SIGNS
- LIGHT POLE
- SHRUB/CONIFER TREE/DECIDUOUS TREE
- SANITARY SEWER MAN HOLE
- BENCHMARK
- FIRE HYDRANT
- UTILITY POLE
- FF=63.11 SLAB=62.50 — FINISH FLOOR/CONCRETE SLAB ELEVATIONS
- 66+3 +66.4 67.5+ — SPOT ELEVATIONS
- IRON PIPE FOUND
- S.F. — SQUARE FEET
- IRON ROD FOUND
- SPRINKLER CONNECTION
- BIT. PAVE. — ASPHALT PAVEMENT
- RET. WALL — RETAINING WALL
- LA — LANDSCAPED AREA
- HANDICAP PARKING
- UTILITY POLE GUY WIRE ANCHOR
- BOLLARD
- GROUND LAMP
- WATER SHUTOFF
- GAS ENTRANCE/METER
- —OHW— OVERHEAD UTILITY WIRES
- —UGE— UNDERGROUND UTILITY WIRES
- HEDGE LINE
- ET — ELECTRICAL TRANSFORMER
- FLAG POLE
- FENCES
- CURB
- N: 259,896.97 FEET E: 1,195,378.48 FEET — MAINE STATE PLANE COORDINATES
- Y.C.R.D. — YORK COUNTY REGISTRY OF DEEDS
- 1225/123 — BOOK AND PAGE OF RECORDED DOCUMENT
- BOUNDARY – LOCUS PARCEL
- BOUNDARY ABUTTING PARCEL
- PARCEL OR EASEMENT LINE
- —D— DRAIN SEWER
- —S— SANITARY SEWER
- N/F — NOW OR FORMERLY
- EP — EDGE OF PAVEMENT

NOTES:

1. PLANIMETRIC DETAIL DEPICTED HEREON IS THE RESULT OF AN ON-THE-GROUND FIELD SURVEY BY CIVIL CONSULTANTS ON MARCH 8 & 9, 2016, APRIL 28, 2016 AND MAY 3, 2016.
2. NORTH AS DEPICTED HEREON IS REFERENCED TO GRID NORTH, NAD83, MAINE STATE PLANE COORDINATE SYSTEM WEST ZONE. COORDINATE VALUES AND ORIENTATION ARE DERIVED FROM A GPS SURVEY COMPUTED UTILIZING THE NGS OPUS ON-LINE PROCESSING SERVICE. REFERENCE FRAME IS NAD83 (2011) EPOCH 2010.0000. THE SURVEY IS TIED TO CORS STATIONS GUNSTOCKMRNH2008 CORS ARP (P776), GORHAM CORS ARP (MEGO) AND NHDOT CONCORD CORS ARP (NHCO). DISTANCES DEPICTED HEREON ARE BASED ON A COMBINED SCALE FACTOR OF 1.0000000. ELEVATIONS AS SHOWN ARE BASED ON NAVD88 DERIVED FROM THE SAME GPS SURVEY. TO CONVERT FROM NAVD88 TO NGVD29, ADD 0.75 FEET TO ELEVATIONS.
3. ROUTE 1 IS A PAVED, PUBLIC HIGHWAY MAINTAINED BY THE STATE OF MAINE. THE SIDELINE AS SHOWN HEREON IS BASED ON REFERENCE PLAN 1. NO INDEPENDENT DETERMINATION OF THE ROAD LINE WAS PERFORMED AS PART OF THIS SURVEY.
4. UTILITY INFORMATION DEPICTED HEREON IS COMPILED USING PHYSICAL EVIDENCE LOCATED IN THE FIELD. UTILITIES DEPICTED HEREON MAY NOT NECESSARILY REPRESENT ALL EXISTING UTILITIES. CONTRACTORS NEED TO CONTACT DIGSAFE AND FIELD VERIFY ALL EXISTING UTILITIES PRIOR TO CONSTRUCTION.
5. THE LOCUS PROPERTY IS IN THE GENERAL BUSINESS (GB) ZONE. THE PORTION OF THE LOT WITHIN 75 FEET OF THE HIGH WATER LINE OF POPE BROOK IS IN THE SHORELAND OVERLAY DISTRICT. REQUIREMENTS FOR THE GB ZONE ARE AS FOLLOWS: MINIMUM STREET FRONTAGE=100', MINIMUM SETBACK FROM STREET RIGHT-OF-WAY=25', MINIMUM SIDE AND REAR SETBACK=15', MAXIMUM BUILDING HEIGHT=34 FEET (3-STORIES), MAXIMUM LOT COVERAGE 65% (20% IN SHORELAND OVERLAY DISTRICT). FOR COMPLETE ZONING INFORMATION REFER TO THE TOWN OF WELLS MUNICIPAL CODE.
6. THE LOCUS PROPERTY IS LOCATED IN "ZONE X" ON THE NATIONAL FLOOD INSURANCE PROGRAM, FLOOD INSURANCE RATE MAP (FIRM) FOR THE TOWN OF WELLS, MAINE, YORK COUNTY, COMMUNITY PANEL NUMBER 230158 0021 D, EFFECTIVE DATE JANUARY 16, 2003. ZONE X IS DEFINED AS "AREAS OUTSIDE THE 500-YEAR FLOODPLAIN".
7. THE BOUNDARY LINES AS SHOWN HEREON ARE BASED ON REFERENCE PLAN 1, AND REFERENCE PLAN 3. RESEARCH FOR THIS SURVEY IS LIMITED TO THE PERIOD FROM JANUARY 1, 1985 TO APRIL 28, 2016. CONDITIONS PREDATING THIS PERIOD AND NOT DEPICTED ON REFERENCE PLAN 1 MAY NOT BE REFLECTED HEREON.

   WETLANDS ASSOCIATED WITH POPE BROOK WERE NOT MAPPED AS PART OF THIS SURVEY. POPE BROOK IS A FRESHWATER (NON-TIDAL) STREAM.
9. IN ADDITION TO EASEMENTS REFERENCED HEREON, SEE (a) Y.C.R.D. BOOK 986, PAGE 527 FOR RIGHT-OF-WAY AND CESSPOOL EASEMENT (LOCATION NOT DETERMINED) AND (b) Y.C.R.D. BOOK 1505, PAGE 549 FOR CENTRAL MAINE POWER COMPANY AND NET&T COMPANY EASEMENT (LOCATION NOT DETERMINED).

REFERENCE PLANS:

1. PLAN OF LAND – U.S. ROUTE 1, WELLS, MAINE FOR PAUL W. LESSARD, DATED APRIL 1981, BY ANDERSON ASSOCIATES.
2. THE ELMWOOD RESORT MOTEL CONDOMINIUM DEVELOPMENT, ROUTE # 1, WELLS, MAINE FOR S. ELDRIDGE, R. MORENCY, DATED NOVEMBER 12, 1985, BY CIVIL CONSULTANTS (PROJ. 85-301), APPROVED BY THE TOWN OF WELLS SITE REVIEW BOARD ON NOVEMBER 18, 1985 (2 SHEETS).
3. PLAN DETAILING THE DIVISION LINE TO BE AGREED UPON BETWEEN LAND OF PETER MILTON AND LAND OF H.E.M., INC., ROUTE 1, WELLS, MAINE, DATED JUNE 4, 1987, BY CIVIL CONSULTANTS, RECORDED AT THE YORK COUNTY REGISTRY OF DEEDS IN PLAN BOOK 157, PAGE 45.
4. STATE OF MAINE DEPARTMENT OF TRANSPORTATION – RIGHT-OF-WAY MAP, STATE HIGHWAY "1", WELLS, YORK COUNTY, FEDERAL AID PROJECT NO. STP-6705(00)X, DOT FILE 16-379, DATED AUGUST 1999, RECORDED AT THE YORK COUNTY REGISTRY OF DEEDS IN PLAN BOOK 277, PAGE 50.
5. THE ELMWOOD RESORT MOTEL CONDOMINIUM DEVELOPMENT SITE PLAN, PREPARED BY CIVIL CONSULTANTS, APPROVED BY THE WELLS SITE REVIEW BOARD ON DECEMBER 5, 1990, RECORDED AT THE YORK COUNTY REGISTRY OF DEEDS IN PLAN BOOK 219, PAGE 7.

SITE INVENTORY NOTES:

SEE SHEET EC2

CERTIFICATION:

THIS SURVEY WAS PERFORMED UNDER MY DIRECT SUPERVISION IN ACCORDANCE WITH THE STANDARDS OF PRACTICE ESTABLISHED BY THE MAINE BOARD OF LICENSURE FOR PROFESSIONAL LAND SURVEYORS (02-360 CMR CHAPTER 90, PART I & PART II – SEE NOTES HEREON FOR EXCEPTIONS, IF ANY).

MAY 3, 2016

CHRISTOPHER H. MENDE DATE:
MAINE PROFESSIONAL LAND SURVEYOR #1302
CIVIL CONSULTANTS
SOUTH BERWICK, MAINE 03908

WELLS PLANNING BOARD – APPROVED
DATE:

TAX MAP 129, LOT 35

STATE OF MAINE — CHRISTOPHER H. MENDE — PLS 1302 — PROFESSIONAL LAND SURVEYOR

© CIVIL CONSULTANTS

CIVIL CONSULTANTS
Engineers
Planners
Surveyors
P.O. Box 100
South Berwick
Maine
03908
207-384-2550
civcon@civcon.com

GRAPHIC SCALE
30 0 15 30 60 120
(IN FEET)
1 inch = 30 ft.

NO.	REVISIONS	INT.	DATE
8			
7			
6			
5			
4	PER PLANNERS EMAIL OF 8/5/16	CHM	8/16/16
3	PER PLANNERS EMAIL OF 7/22/16	CHM	8/04/16
2	PER PLANNERS EMAIL OF 7/18/16	CHM	7/20/16
1	BOUNDARY AT BROOK	CHM	5/5/16

DRAWN CHM	CALC. CHM
DATE MAY 3, 2016	
CHECKED MPP	
APPROVED CHM	
SCALE 1"=30'	
FIELD BOOK	
DATA COL. FILES	

SHEET TITLE: • **SITE**

SITE PLAN AMENDMENT OF ELMWOOD CONDOMINIUM
1351 ROUTE 1 (POST ROAD)
WELLS, YORK COUNTY, MAINE

PREPARED FOR:
THE ELMWOOD CONDOMINIUM ASSOCIATION
MAILING ADDRESS: 1351 POST ROAD, WELLS, ME 04090

SHEET NUMBER: **EC1**

SHEET 1 OF 2

PROJECT # 16-133.00

DATE STAMP: AUGUST 16, 2016/1:00 P.M. DRAWING LOCATION: J:\AAA\2016\1613300\CARLSON\DRAWING\EXIST-COND-2016-PLANNING BOARD.DWG COORDINATE FILE: J:\AAA\2016\1613300\CARLSON\POINTS\MSPCS83W-NAVD88.CRD

SITE NOTES:

1. THE PURPOSE OF THIS SITE PLAN AMENDMENT APPLICATION IS TO OBTAIN APPROVAL TO CONSTRUCT AN ENCLOSED ENTRY (8' X 8') AND A 300 S.F. FUTURE DECK ADDITION/HOT TUB AREA OFF OF THE EXISTING INDOOR POOL BUILDING DECK, AND TO OBTAIN AFTER-THE-FACT APPROVAL FOR THE FOLLOWING SITE PLAN AMENDMENTS MADE SINCE THE PRIOR SITE PLAN APPROVAL OF DECEMBER 5, 1990:
   a. RECONSTRUCTION/ENLARGEMENT/ALTERED PLACEMENT OF THE INGROUND POOL
   b. CONSTRUCTION OF A POOL SHED
   c. INSTALLATION OF AN OUTDOOR PATIO/PROJECTOR AREA
   d. INSTALLATION OF A SAND PLAYGROUND
   e. RELOCATION OF DUMPSTERS
   f. CONSTRUCTION OF A DECK AND STAIRS ONTO THE INDOOR POOL BUILDING
   g. AS-BUILT LOCATIONS OF ALL STRUCTURES AND OTHER SITE FEATURES SUCH AS FENCING, PROPANE TANKS, LIGHTING, LANDSCAPING, UTILITIES, ETC.
   h. ADDITIONAL PAVEMENT/PARKING TO THE SOUTH OF THE OFFICE BUILDING.
2. THE PROPERTY IS LOCATED OFF OF 1351 POST ROAD AND IS WITHIN THE GENERAL BUSINESS & 75' SHORELAND OVERLAY DISTRICTS.
3. THE PARCEL IS IDENTIFIED AS TAX MAP 129, LOT 35.
4. THE PARCEL IS SERVED BY PUBLIC SEWER (WSD) AND PUBLIC WATER (KKWWD).
5. THE PARCELS CONTAINS THE FOLLOWING USES:
   a. 77 MOTEL UNITS
      BUILDING 1: 29 ONE-BEDROOM UNITS, 30 TWO-BEDROOM ('LOFT UNITS') AND 1 THREE-BEDROOM UNIT
      BUILDING 2: 7 ONE-BEDROOM UNITS AND 10 TWO-BEDROOM ('LOFT UNITS')
   b. LODGING FACILITY OFFICE, ACCESSORY LAUNDRY UNIT, MANAGER'S QUARTERS (IN BUILDING 2), STORAGE AND AMENITIES (POOLS, PLAYGROUNDS, ETC.)
6. THE PROPERTY IS CONSIDERED A LODGING FACILITY PER 145-52 OF THE WELLS CODE.
   a. MOTEL UNITS ARE RESTRICTED TO 470 S.F. OF GROSS FLOOR AREA AND ARE PERMITTED TO HAVE A 160 S.F. DECK/PORCH. DECKS/PORCHES NOT CLIMATE CONTROLLED. SEE 145-52A. MOTEL UNITS ARE GRANDFATHERED IN THEIR EXISTING SQUARE FOOTAGES. SEE GROSS FLOOR SPACE TABLE.
   b. ALL LODGING UNITS OCCUPANCY: NO MORE THAN 29 CONSECUTIVE DAYS, AND AFTER SUCH OCCUPANCY, SAID PARTY TO VACATE THE PREMISES FOR 5 DAYS.
   c. LODGING FACILITY OFFICE HOURS: 8 AM - 8 PM OFF SEASON; 8 AM - 11 PM IN SEASON.
7. THE PROPERTY IS CONSIDERED NON-CONFORMING WITH REGARD TO, BUT NOT LIMITED TO: DENSITY, SETBACKS, LANDSCAPED BUFFERS, LODGING UNIT GROSS FLOOR AREA SIZES, LODGING UNIT DECK/PORCH SIZES, PARKING SPACE DIMENSIONS, AISLE WIDTHS, LODGING FACILITY OFFICE HOURS, AND NUMBER OF UNITS PER BUILDING. NO CHANGES ARE PROPOSED/PERMITTED TO INCREASE THESE NON-CONFORMITIES.
8. THE EXPANDED PARKING LOT SOUTH OF BUILDING 2 WAS CONSTRUCTED IN THE LOCATION OF AN OLD BUILDING FOUNDATION. THIS EXPANDED PARKING AREA HAS EXISTED SINCE THE FACILITY WAS CONSTRUCTED IN THE 1980'S.
9. THE EXISTING DECK CONSTRUCTED ON THE SOUTH SIDE OF THE INDOOR POOL BUILDING HAS EXISTED SINCE THE FACILITY WAS CONSTRUCTED IN THE 1980'S.
10. GENERAL BUSINESS DIMENSIONAL REQUIREMENTS:
   a. MIN. LOT SIZE: 20,000 S.F. NET AREA (IF SERVED BY SEWER)
   b. MAX. DENSITY: 20,000 S.F. NET AREA PER DWELLING (IF SERVED BY SEWER)
      20 HOTEL/MOTEL UNITS PER ACRE OF NET AREA (SEE DENSITY TABLE)
   c. MIN. STREET FRONTAGE: 100 FEET. / 151.54 FEET PROVIDED.
   d. MAX. LOT COVERAGE: 65%, 20% IN SHORELAND OVERLAY
   e. MAX. BUILDING HEIGHT: 34 FEET, NOT TO EXCEED 3 STORIES
   f. STRUCTURE SETBACKS: 15 FEET FROM LOT LINE, 25 FEET FROM CEMETERY BOUNDARY, 40 FEET FROM ROUTE 1, 25 FEET FROM LOT LINE ABUTTING A STREET RIGHT OF WAY
   g. MINIMUM SHORE FRONTAGE: 200 FEET (ON POPE BROOK) - 329.09 FEET (TIE) EXISTS
11. LOT COVERAGE:
   PRIOR APPROVED: 76,502 S.F. OR 52.4%
   EXISTING (AS-BUILT): 82,087 S.F. OR 56.23% (SEE SITE INVENTORY NOTES)
   PROPOSED: 82,387 S.F. OR 56.43%

   SHORELAND OVERLAY LAND AREA 40,841 S.F. / 0.938 ACRES
   SHORELAND OVERLAY COVERAGE: 2,839 S.F. OR 6.95%
   SHORELAND OVERLAY FRONTAGE ON POPE BROOK = 35'+370' = 405'± (REQUIRED=200')
12. LANDSCAPE BUFFER & SETBACK REQUIREMENTS:
   a. LODGING FACILITY BUFFER/SETBACK FROM ROUTE 1: 1-STORY BUILDING 40 FEET; 2-STORY BUILDING 60 FEET; 3-STORY BUILDING 80 FEET
   b. LODGING FACILITY REQUIRES A VEGETATED BUFFER ALONG ALL LOT LINES TO BE 25 FEET IN WIDTH. SAID BUFFER AND CHANGES TO BUFFER AREA REQUIRE PLANNING BOARD APPROVAL.
   c. THE EXISTING LAWN/BRUSH VEGETATION LINE SHALL BE MAINTAINED.
13. SIGNAGE SHALL COMPLY WITH THE LAND USE CODE. THE SIGN IS ILLUMINATED BY GROUND MOUNTED DIRECTIONAL LIGHTING.
14. EXTERIOR LIGHTING SHALL COMPLY WITH THE LAND USE CODE AND NOT PRODUCE GLARE ONTO ABUTTING LOTS OR STREETS. NO CHANGES TO LIGHTING ARE PROPOSED.
15. PARKING ALONG ROUTE 1 IS PROHIBITED.
16. PARKING REQUIREMENTS:
   a. 77 LODGING UNITS REQUIRE 1.1 SPACES PER BEDROOM (119 BEDROOMS X 1.1 = 131 REQUIRED SPACES. PRIOR APPROVAL REQUIRED 119 PARKING SPACES FOR WHICH THE SITE IS GRANDFATHERED.
   b. THE PARCEL PROVIDES A TOTAL OF 113 PAVED PARKING SPACES, 5 OF WHICH SHALL BE HANDICAP ACCESSIBLE WITH ADA COMPLIANT SIGNAGE
   c. A REDUCTION IN REQUIRED PARKING SPACES FROM 131 OR 119 IS PERMITED BY THE PLANNING BOARD DUE TO PUBLIC TRANSPORTATION (TROLLEY STOP) PROVIDED IN FRONT OF THIS FACILITY. 113 SPACES IS FOUND TO BE ACCEPTABLE. NO KNOWN PARKING ISSUES EXIST FOR THE PARCEL.
   d. ALL 90 DEGREE REGULAR PARKING SPACES PREVIOUSLY APPROVED TO BE 9 FEET x 18 FEET WITH 26-FOOT WIDE AISLES. COMPACT SPACES APPROVED TO BE 8 FEET x 18 FEET IN DIMENSION. PARKING LOT STRIPING TO MAINTAIN 26-FOOT WIDE AISLES. VARIOUS SPACES ARE STRIPED WITH A 13-FOOT DEPTH BUT MAINTAIN A 30-FOOT WIDE AISLE.
   e. PARKING LOT RE-STRIPING TO BE COMPLETED AND MAINTAINED IN COMPLIANCE WITH THIS SITE PLAN NO LATER THAN OCTOBER 1, 2016. PARKING SPACE AT NORTH CORNER OF OFFICE TO BE MARKED AS HANDICAP SPACE.
17. REFUSE DISPOSAL IS MANAGED BY AN ON-SITE DUMPSTER. THE DUMPSTER SHALL MEET LOT LINE SETBACK REQUIREMENTS AND BE SCREENED BY A SOLID 6-FOOT TALL FENCE/VEGETATION. REFUSE SHALL BE DISPOSED OF ON A REGULAR BASIS. THE DUMPSTER IS PERMITTED TO BE TEMPORARILY RELOCATED AS DEPICTED ON THE PLAN IN THE WINTER MONTHS DUE TO THE STEEP PARKING LOT GRADES THAT ACCESS THE REGULAR DUMPSTER LOCATION.
18. THERE IS A KNOX BOX INSTALLED ON SITE AT THE WEST OFFICE ENTRANCE.
19. BEST MANAGEMENT PRACTICES FOR SOIL AND SEDIMENTATION EROSION CONTROL ARE A STANDARD CONDITION OF APPROVAL. SEE THE FINDINGS OF FACT & DECISIONS FOR THIS SITE PLAN APPROVAL-CONDITIONS OF APPROVAL.
20. BUILDINGS 1 AND 2 ARE SERVED BY ON-SITE SPRINKLER SYSTEMS.
21. THE EXISTING MANAGER'S QUARTERS OBTAINED APPROVAL BY THE ZONING BOARD OF APPEALS (ZBA) IN 1997 AND WAS GRANTED A BUILDING PERMIT IN JUNE 1997. THE MANAGER'S QUARTERS WAS NOT CONSIDERED A DWELLING UNIT OR A LODGING UNIT BY THE ZBA, BUT RATHER IT WAS CONSIDERED ACCESSORY TO THE LODGING FACILITY USE IN ORDER TO MANAGE THE FACILITY.
22. A MINIMUM 3-FEET OF CLEARANCE, FREE OF VEGETATION AND OBSTRUCTIONS THAT LIMIT PROPER ACCESS, SHALL BE MAINTAINED AROUND THE FIRE HYDRANT.
23. EXPLOSIVE MATERIALS SHALL BE STORED IN COMPLIANCE WITH NFPA REQUIREMENTS.

CERTIFICATION:

THIS SURVEY WAS PERFORMED UNDER MY DIRECT SUPERVISION IN ACCORDANCE WITH THE STANDARDS OF PRACTICE ESTABLISHED BY THE MAINE BOARD OF LICENSURE FOR PROFESSIONAL LAND SURVEYORS (02-360 CMR CHAPTER 90, PART I & PART II - SEE NOTES HEREON FOR EXCEPTIONS, IF ANY).

MAY 3, 2016

CHRISTOPHER H. MENDE DATE:
MAINE PROFESSIONAL LAND SURVEYOR #1302
CIVIL CONSULTANTS
SOUTH BERWICK, MAINE 03908

SITE INVENTORY NOTES:

A. GROSS LOT AREA = 3.352 ACRES, 145,993 SQUARE FEET
   AREA OF WATER BODY = 0.040 ACRES, 1,756 SQUARE FEET
   NET LOT AREA = 3.312 ACRES, 144,237 SQUARE FEET

B. TOTAL BUILDING AREA AT GROUND LEVEL = 32,203 S.F.
   BUILDING 1 = 21,994 S.F.
   BUILDING 2 = 7,519 S.F.
   BUILDING 3 = 2,539 S.F.
   BUILDING 4 = 151 S.F.

C. POOL AND CONCRETE DECK AREA = 3,064 S.F.

D. ASPHALT PAVEMENT AREA = 45,850 S.F.

E. STEPS, CONCRETE PADS, RAMP, DECK, RETAINING WALLS, PROJECTOR AND BRICK PAVING AREA TOTAL = 970 S.F.

F. TOTAL IMPERVIOUS LOT COVERAGE = 82,087 S.F.
   82,087 S.F./145,993 S.F. = 56.23% COVERAGE

G. TOTAL PARKING SPACES = 113
   HANDI-CAPPED SPACES = 5
   REGULAR SPACES = 108

DENSITY TABLE:

A. 77 HOTEL/MOTEL UNITS CONSTRUCTED ON SITE

B. ALLOWED DENSITY: 20 HOTEL/MOTEL UNITS PER ACRE OF NET AREA
   3.312 NET ACRES X 20 UNITS/ACRE = 66 UNITS

GROSS FLOOR SPACE:

A. BUILDING 1:
   23 ONE BEDROOM UNITS @ 512 S.F./UNIT
   23 TWO BEDROOM UNITS @ 816 S.F./UNIT
   6 ONE BEDROOM UNITS @ 576 S.F./UNIT
   6 TWO BEDROOM UNITS @ 912 S.F./UNIT
   1 TWO BEDROOM UNIT @ 1140 S.F.
   1 THREE BEDROOM UNIT @ 1710 S.F.
   SUBTOTAL = 42,322 S.F.

B. BUILDING 2:
   7 ONE BEDROOM UNITS @ 576 S.F./UNIT
   7 TWO BEDROOM UNITS @ 912 S.F./UNIT
   3 TWO BEDROMM UNITS @ 816 S.F./UNIT
   SUBTOTAL = 12,864 S.F.

C. BUILDING 2:
   OFFICE UNIT @ 512 S.F.
   MANAGER'S QUARTERS UNIT @ 769 S.F.
   LAUNDRY UNIT @ 255 S.F.
   SUBTOTAL = 1,536 S.F.

GRAND TOTAL = 56,722 S.F.

MOTEL UNIT SIZES ARE GRANDFATHERED AS APPROVED IN 1985. NO CHANGE TO MOTEL UNIT SIZES ARE PROPOSED.

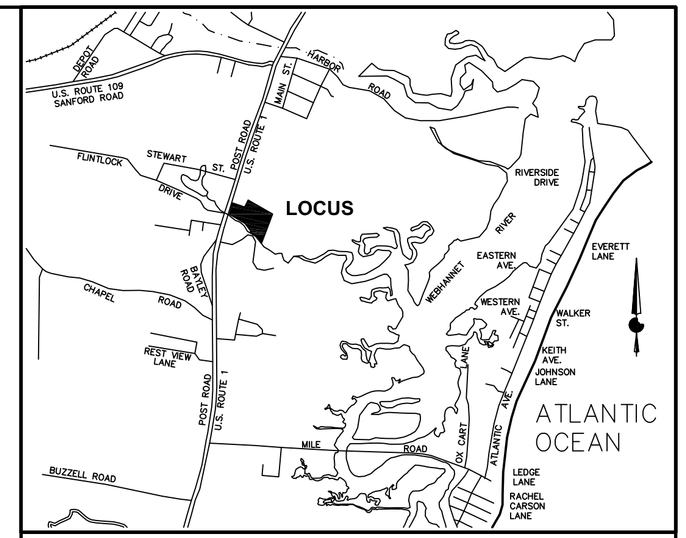

LOCATION PLAN
(NOT TO SCALE)

WELLS PLANNING BOARD - APPROVED
DATE:

TAX MAP 129, LOT 35

STATE OF MAINE — CHRISTOPHER H. MENDE — PLS 1302 — PROFESSIONAL LAND SURVEYOR

© CIVIL CONSULTANTS

CIVIL CONSULTANTS
Engineers
Planners
Surveyors
P.O. Box 100
South Berwick
Maine
03908
207-384-2550
civcon@civcon.com

GRAPHIC SCALE
30 0 15 30 60 120
(IN FEET)
1 inch = 30 ft.

NO.	REVISIONS	INT.	DATE
8			
7			
6			
5			
4	PER PLANNERS EMAIL OF 8/5/16	CHM	8/16/16
3	PER PLANNERS EMAIL OF 7/22/16	CHM	8/04/16
2	PER PLANNERS EMAIL OF 7/18/16	CHM	7/20/16
1	BOUNDARY AT BROOK	CHM	5/5/16

DRAWN CHM | CALC. CHM
DATE MAY 3, 2016
CHECKED MPP
APPROVED CHM
SCALE 1"=30'
FIELD BOOK
DATA COL. FILES

SHEET TITLE:
• SITE

SITE PLAN AMENDMENT OF ELMWOOD CONDOMINIUM
1351 ROUTE 1 (POST ROAD)
WELLS, YORK COUNTY, MAINE

PREPARED FOR:
THE ELMWOOD CONDOMINIUM ASSOCIATION
MAILING ADDRESS: 1351 POST ROAD, WELLS, ME 04090

SHEET NUMBER: **EC2**
SHEET 2 OF 2
PROJECT # 16-133.00

DATE STAMP: AUGUST 16, 2016/1:00 P.M. DRAWING LOCATION: J:\AAA\2016\1613300\CARLSON\DRAWING\EXIST-COND-2016-PLANNING BOARD.DWG COORDINATE FILE: J:\AAA\2016\1613300\CARLSON\POINTS\MSPCS83W-NAVD88.CRD

Planning & Development
208 Sanford Road, Wells, Maine 04090
Phone: (207) 646-5187, Fax: (207) 646-7046
Website: www.wellstown.org

Michael G. Livingston, Town Engineer/Planner	*mlivingston@wellstown.org*
Shannon M. L. Belanger, Planning Assistant	*sbelanger@wellstown.org*

Final Subdivision Amendment Application Memo

Date: August 18, 2016

To: Planning Board

From: Planning Office

Re: Robinson Commons Subdivision Amendment - Map 49, Lot 13

Project Description:

Walter Pelkey of BH2M has submitted a Final Subdivision Amendment Application to amend the Lindsey Road landscaped buffer for the major subdivision located off of Lindsey Road and Sanford Road to rectify cutting that occurred within the "no cut buffer" as defined on the subdivision plan. The subdivision consists of 3 lots with each lot to support a two-family residential unit (duplex) or two single family dwellings for a total of 6 dwelling units. The subdivision is located within the Residential A District. The parcels shall be served by private subsurface wastewater disposal systems and drilled wells. All lots are proposed to have driveways off of Lindsey Road.

§ 202-10. Revisions to approved plans.

A. Procedure. An applicantion for a revision to a previously approved plan shall, at least five business days prior to a scheduled meeting of the Board, request to be placed on the Board's agenda. **Planning Board to receive Amendment Application on 8/22/16**

(1) If the revision involves the creation of additional lots or dwelling units, the procedures for preliminary plan approval shall be followed, unless the revised plan meets the definition of a minor subdivision. If the revision involves only modifications of the approved plan, without the creation of additional lots or dwelling units, the procedures for final plan approval shall be followed. **Final plan approval procedures to be followed.**

(2) The applicant shall pay a fee established by the Board of Selectmen following notice and a public hearing, to include the applicable per-dwelling-unit fee according to the procedures for a minor subdivision or preliminary plan for a major subdivision. In addition, the applicant shall pay a fee to be determined by the Board, to be deposited in a special account designated for that application, to be used by the Board for hiring independent consulting services to review the application. If the balance in this special account shall be drawn down by 75%, the Board shall notify the applicant and require that an additional $50 beyond the balance after invoices received are paid be deposited by the applicant. The Board shall continue to notify the applicant and require that an additional $50 be deposited as necessary whenever the balance of the

account is drawn down by 75% of the original deposit. Any balance in the account remaining after a decision on the revision by the Board shall be returned to the applicant. If a public hearing is deemed necessary by the Board, an additional fee of $200 shall be required to cover the costs of advertising and postal notification. [Amended 7-23-2002; 4-16-2004] **Fee and escrow provided. Public Hearing to be determined.**

B. Submissions. The applicant shall submit a copy of the approved plan, as well as 11 copies of the proposed revisions. The application shall also include enough supporting information to allow the Board to make a determination that the proposed revisions meet the standards of these regulations and the criteria of the statute. The revised plan shall indicate that it is the revision of a previously approved and recorded plan and shall show the book and page or cabinet and sheet on which the original plan is recorded at the Registry of Deeds. The applicant shall provide evidence that all owners of abutting property were notified of the application if new lots or dwelling units are proposed to be created. **[**Amended 7-23-2002]

C. Scope of review. The Board's scope of review shall be limited to those portions of the plan which are proposed to be changed.

§ 202-9. Final plan for major subdivision.

A. Procedure.

(1) The subdivider shall, within six months after the approval of the preliminary plan, file with the Board an application for approval of the final plan at least 10 days prior to a scheduled meeting of the Board. If the application for the final plan is not submitted within six months after preliminary plan approval, the Board may refuse without prejudice to act on the final plan and require resubmission of the preliminary plan. The final plan shall approximate the layout shown on the preliminary plan, plus any recommendations made by the Board. **[Amended 7-11-1996] Planning Board to consider receiving the amendment application on 8/22/16**

(2) If a public hearing is deemed necessary by the Board, an additional fee in the amount established by the Board of Selectmen following notice and a public hearing shall be required to cover the costs of advertising and postal notification. **[Amended 7-9-2002; 4-16-2004] Public Hearing to be determined**

(3) The subdivider, or his duly authorized representative, shall attend the meeting of the Board to discuss the final plan. **To be determined**

(4) When the application is received by the Planning Board, it shall give the applicant a dated receipt acknowledging that it has received the application. **To be determined**

(5) Within 30 days after receiving any application, the Board shall notify the applicant in writing either that the application is complete or, if it is incomplete, the specific additional material needed to complete the application. The Board shall determine whether to hold a public hearing on the final plan application. **To be determined**

(6) Prior to submittal of the final plan application, the following approvals shall be obtained in writing, where appropriate:

(a) Maine Department of Environmental Protection, under the Site Location of Development Act and the Natural Resources Protection Act. Editor's Note: See 38 M.R.S.A § 481 et seq. and 38 M.R.S.A. § 480-A et seq., respectively. **Not Applicable**

(b) The Kennebunk, Kennebunkport and Wells Water District, if the district's water service is to be used. **Not Applicable**

(c) Maine Department of Human Services, if the subdivider proposes to provide a central water supply system. **Not Applicable private wells are proposed.**

(d) The Wells Sanitary District, if the public sewage disposal system is to be used. **Not Applicable**

(e) Maine Department of Human Services, if a centralized or shared subsurface sewage disposal system(s) is to be utilized. **Not Applicable as centralized or shared sewage disposal systems are not proposed.**

(f) An Army Corps of Engineers dredge and fill permit. **Not Applicable**

(g) NPDES permit for stormwater discharges. **Not Applicable**

(7) A public hearing may be held by the Planning Board within 30 days after the issuance of a receipt for the submittal of a complete application. This hearing shall be advertised in a newspaper of local circulation at least two times, the date of the first publication to be at least seven days before the hearing, and the notice of the hearing shall be posted in at least three prominent places at least seven days prior to the hearing. When a subdivision is located within 500 feet of a municipal boundary and a public hearing is to be held, the Planning Board shall notify the Clerk and the Planning Board of the adjacent municipality involved at least 10 days prior to the hearing. **To be determined**

(8) Upon receipt of an application for a subdivision containing 20 lots or dwelling units or more, the Planning Board shall notify the Road Commissioner, School Superintendent, Police Chief and Fire Chief of the proposed subdivision, the number of dwelling units proposed, the length of roadways and the size and construction characteristics of any multifamily, commercial or industrial buildings. The Planning Board shall request that these officials comment upon the adequacy of their department's existing capital facilities to service the proposed subdivision. **Not Applicable**

(9) Before the Board grants approval of the final plan, the subdivider shall meet the performance guaranty requirements contained in § 202-13. **To be determined**

(10) The Board, within 30 days from the public hearing or within 60 days of the official submittal date if no hearing is held, shall make findings of fact and conclusions relative to the standards contained in 30-A M.R.S.A. § 4404, Subsection 3 and in these regulations. If the Board finds that all standards of the statute and these regulations have been met, it shall approve the final plan. If the Board finds that any of the standards of the statute and these regulations have not been met, the Board shall either deny the application or approve the application with conditions to ensure all of the standards will be met by the subdivision. The reasons for any denial or conditions shall be stated in the records of the Board. **To be determined**

B. Submissions. The final plan shall consist of one or more maps or drawings drawn to a scale of not more than 100 feet to the inch. Plans for subdivisions containing more than 75 acres may be drawn at a scale of not more than 200 feet to the inch. Plans shall be no larger than 24 inches by 36 inches in size and shall have a margin of two inches outside of the border line on the left side for binding and a one-inch margin outside the border along the remaining sides. Space shall be reserved thereon for endorsement by the Board. One reproducible, stable-based transparent original and three copies of the plan shall be submitted. In addition, the applicant shall submit 11 copies of the final plan, reduced to a size of 11 inches by 17 inches, and all accompanying information to the Office of Planning and Development no less than 10 days prior to the meeting. The application for approval of the final plan shall include the following information:

Recommendations and conclusions:

I. The Planning Board should consider receiving the subdivision amendment application.

II. The Planning Board should determine if a site walk is necessary. See attached memo dated 8/9/16 regarding the recent site visit conducted by the CEO and Planner.

III. If a site walk is deemed necessary it should be scheduled and the workshop of the application to be continued.

IV. If a site walk is waived the Planning Board should workshop completeness and consider finding the application complete.

V. If the application is found complete, the Planning Board should determine if a public hearing is necessary. If so, one should be scheduled for 9/12/16.

VI. If a public hearing is waived or found not needed, the Planning Board should workshop compliance and consider finding the application compliant.

VII. If compliant, the Planning Board should consider approving and signing the Findings of Fact & Decisions and plan.

Project Name/Tax Map & Lot #:	Robinson Commons Amendment/ Tax Map 49, Lot 13	District:	RA
Prepared By:	Planning Office	Review Date:	08/18/16
Plans Dated:	08/17/16	Final Plan Revisions Submittal Date:	08/18/16

Chapter 202
Subdivision of Land

§ 202-9. Final plan for major subdivision			Application Meet Requirements				
			Yes	No	NA	Waiver	Comments
B.	Submissions. The final plan shall consist of one or more maps or drawings drawn to a scale of not more than 100 feet to the inch. Plans for subdivisions containing more than 75 acres may be drawn at a scale of not more than 200 feet to the inch. Plans shall be no larger than 24 inches by 36 inches in size and shall have a margin of two inches outside of the border line on the left side for binding and a one-inch margin outside the border along the remaining sides. Space shall be reserved thereon for endorsement by the Board. One reproducible, stable-based transparent original and three copies of the plan shall be submitted. In addition, the applicant shall submit 11 copies of the final plan, reduced to a size of 11 inches by 17 inches, and all accompanying information to the Office of Planning and Development no less than 10 days prior to the meeting. The application for approval of the final plan shall include the following information: **[Amended 4-13-1999]**		**Y**				Scale is 1” = 60’. Sufficient copies provided.
	(1)	Proposed name of the subdivision and the name of the municipality in which it is located, plus the Assessor's map and lot numbers.	**Y**				Lots identified with appropriate map and lot numbers.
	(2)	An actual field survey of the boundary lines of the tract, giving complete descriptive data by bearings and distances, made and certified by a licensed land surveyor. The corners of the tract shall be located on the ground and marked by monuments. The plan shall indicate the type of monument set or found at each lot corner.	**Y**				Plan is stamped by Robert C. Libby JR, PLS #2190. Parcel corners are shown to have Monumentation. On 11/16/15 the Planning Board found the Monumentation proposed is acceptable. No changes to Monumentation proposed.
	(3)	The number of acres within the proposed subdivision, location of property lines, existing buildings, watercourses and other essential existing physical features.	**Y**				On site wetlands identified on sheet. See note 4.

Project Name/Tax Map & Lot #:	Robinson Commons Amendment/ Tax Map 49, Lot 13	District:	RA
Prepared By:	Planning Office	Review Date:	08/18/16
Plans Dated:	08/17/16	Final Plan Revisions Submittal Date:	08/18/16

§ 202-9. Final plan for major subdivision			Application Meet Requirements				
			Yes	No	NA	Waiver	Comments
	(4)	Indication of the type of sewage disposal to be used in the subdivision. When sewage disposal is to be accomplished by connection to the public sewer, a written statement from the Wells Sanitary District indicating that the district has reviewed and approved the sewerage design shall be submitted.	Y				See note 11. Limiting factors for test pits are labelled. Septic field boxes are depicted. See note 10. No changes to septic locations proposed.
	(5)	Indication of the type of water supply system(s) to be used in the subdivision.	Y				See note 12. No changes to well locations proposed.
		(a) When water is to be supplied by public water supply, a written statement from the Kennebunk, Kennebunkport and Wells Water District shall be submitted indicating that the district has reviewed and approved the water system design. A written statement shall be submitted from the Fire Chief approving all hydrant locations or other fire protection measures deemed necessary.			NA		
		(b) The Board makes a finding that adequate groundwater resources to support one- and two-family homes, in both quantity and quality, are available generally throughout the Town of Wells. However:					
		[1] When a proposed subdivision is not served by the Kennebunk, Kennebunkport and Wells Water District, evidence of adequate groundwater quality shall be required for proposed subdivisions in the vicinity of known sources of potential groundwater contamination, such as the Wells landfill, Bragdon septage disposal site and the Spiller sludge disposal site. The results of a primary inorganic water analysis performed upon a well on the parcel to be subdivided or from wells on adjacent parcels, between the parcel to be subdivided and the potential contamination source, shall be submitted.	Y				See standard condition of approval 3#. Subdivision standard condition of approval notes are noted on the plan.
		[2] When a proposed subdivision is to be served by a private central water system or contains structures other than one- or two-family dwellings, evidence of adequate groundwater quantity shall be required.			NA		A central water system is not proposed.

Project Name/Tax Map & Lot #:	Robinson Commons Amendment/ Tax Map 49, Lot 13	District:	RA
Prepared By:	Planning Office	Review Date:	08/18/16
Plans Dated:	08/17/16	Final Plan Revisions Submittal Date:	08/18/16

§ 202-9. Final plan for major subdivision			Application Meet Requirements				
			Yes	No	NA	Waiver	Comments
	(6)	The date the plan was prepared, North point (identified as magnetic or true), graphic map scale, and names and addresses of the record owner, subdivider and individual or company who or which prepared the plan.	Y				
	(7)	The location of any zoning boundaries affecting the subdivision	Y				RA zone abuts the RC and Rural zones. Zoning boundaries are identified.
	(8)	The location and size of existing and proposed sewers, water mains, culverts and drainageways on or adjacent to the property to be subdivided.	Y				Existing culverts depicted. See note 24 for proposed culverts. Existing and proposed septic areas depicted.
	(9)	The location, names and present widths of existing and proposed streets, highways, easements, building lines, parks and other open spaces on or adjacent to the subdivision. The plan shall contain sufficient data to allow the location, bearing and length of every street line, lot line and boundary line to be readily determined and be reproduced upon the ground. These lines shall be tied to reference points previously established. The length of all straight lines, the deflection angle radii, length of curves and central angles of curves, tangent distances and tangent bearings for each street shall be included.	Y				Lindsay Road, Route 109, Grand Trail Drive locations noted, widths noted. Existing duplex on lot 3 is depicted. Other building lines adjacent to the subdivision not noted.
	(10)	The width and location of any streets or public improvements shown upon the Official Map and the Comprehensive Plan, if any, within the subdivision.			NA		No such improvements proposed.
	(11)	All parcels of land proposed to be dedicated to public use and the conditions of such dedication. Written offers of cession to the municipality of all public open spaces shown on the plan and copies of agreements or other documents showing the manner in which open spaces to be retained by the developer or lot owners are to be maintained shall be submitted. If land is to be offered to the municipality, written evidence that the municipal officers are satisfied with the legal sufficiency of the written offer of cession shall be included.			NA		No such dedication proposed.

Project Name/Tax Map & Lot #:	Robinson Commons Amendment/ Tax Map 49, Lot 13	District:	RA
Prepared By:	Planning Office	Review Date:	08/18/16
Plans Dated:	08/17/16	Final Plan Revisions Submittal Date:	08/18/16

§ 202-9. Final plan for major subdivision		Application Meet Requirements				
		Yes	No	NA	Waiver	Comments
(12)	A list of construction items with cost estimates that will be completed by the developer prior to the sale of lots and, for subdivisions containing more than 20 lots, a separate list of construction and maintenance items, with both capital and annual operating cost estimates, that must be financed by the municipality or quasi-municipal districts.	Y				Cost of Monumentation has been provided. This subdivision proposes less than 20 lots; therefore a separate list of construction and maintenance items with capital and annual operation costs is not required.
	(a) These lists shall include but not be limited to: schools, including busing; street maintenance and snow removal; police and fire protection; solid waste disposal; recreation facilities; stormwater drainage; wastewater treatment; and water supply.			NA		This subdivision proposes less than 20 lots.
	(b) The developer shall provide an estimate of the net increase in taxable assessed valuation at the completion of the construction of the subdivision.			NA		This subdivision proposes less than 20 lots.
(13)	If any portion of the subdivision is in a flood-prone area, the boundaries of any flood hazard areas and the one-hundred-year flood elevation shall be delineated on the plan.			NA		See note 18. The property is within flood zone X which is not a flood-prone area.
(14)	A soil erosion and sedimentation control plan, prepared in accordance with the Maine Erosion and Sedimentation Control Handbook for Construction: Best Management Practices, published by the Maine Department of Environmental Protection and the Cumberland County Soil and Water Conservation District, 1991. **[Amended 4-27-2007]**			NA		No road construction proposed.
(15)	A stormwater management plan, prepared by a registered professional engineer in accordance with the most recent edition of Stormwater Management For Maine: BMPS Technical Design Manual, published by the Maine Department of Environmental Protection, 2006. Another methodology may be used if the applicant can demonstrate it is equally or more applicable to the site. **[Amended 4-27-2007]**				W	No road construction required. See note 16 requiring Low Impact Development (LID) methods to be installed for each building. Planning Board granted a waiver of requiring a stormwater management plan on 11/2/15. No changes to stormwater management proposed.

Project Name/Tax Map & Lot #:	Robinson Commons Amendment/ Tax Map 49, Lot 13	District:	RA
Prepared By:	Planning Office	Review Date:	08/18/16
Plans Dated:	08/17/16	Final Plan Revisions Submittal Date:	08/18/16

§ 202-9. Final plan for major subdivision		Application Meet Requirements				
		Yes	No	NA	Waiver	Comments
(16)	If any portion of the proposed subdivision is located in the direct watershed of Ell Pond or within 500 feet of the upland edge of Hobbs Pond and meets the following criteria: 1. five or more lots or dwelling units created within any five-year period; or 2. any combination of 800 linear feet of new or upgraded driveways and/or streets, then the following shall be submitted or indicated on the plan: **[Added 4-27-2007]**			**NA**		Subdivision not located within the watershed of Ell Pond or within 500 feet of Hobbs Pond.
	(a) A phosphorus impact analysis and control plan conducted using the procedures set forth in MDEP Phosphorus Design Manual, Volume II of the Maine Stormwater Best Management Practices Manual, 2006. The analysis and control plan shall include all worksheets, engineering calculations, and construction specifications and diagrams for control measures, as required by the most recent edition of Stormwater Management For Maine: BMPS Technical Design Manual, published by the Maine Department of Environmental Protection, 2006;					
	(b) A long-term maintenance plan for all phosphorus control measures;					
	(c) The contour lines shown on the plan shall be at an interval of no less than five feet; and					
	(d) Areas with sustained slopes greater than 25% covering more than one acre shall be delineated.					

Town of Wells, Maine
Planning Board

FINDINGS OF FACTS & DECISIONS
Final Subdivision Amendment Application for "Robinson Commons"

Chapter 202
Subdivision of Land

PROJECT INFORMATION		
General:	**Project Name:**	Robinson Commons Subdivision
	# Lots Proposed:	0 lots/dwellings proposed; 3 lots/ 6 dwelling units exist
	Applicant:	Craig B. Robinson, 542 A Lindsay Rd, Wells, ME 04090
	Landowner:	Craig B. Robinson, 542 A Lindsay Rd, Wells, ME 04090
	Location:	Lindsey Road, Wells, Maine
	Existing Use:	A Major Subdivision consisting of 3 lots/6 dwelling units on 6.042 acres of land
	Proposed Land Use:	A Major Subdivision consisting of 3 lots/6 dwelling units on 6.042 acres of land
	Tax Parcel ID:	Tax Map 49, Lot 13 (to become 13-1, 13-2, and 13-3)
	Zoning District:	Residential A
	Chpt 145,Art VII Performance Standards:	None
	Design Engineer:	Walter Pelkey, BH2M, 28 State St, Gorham, ME 04038
	Final Plan Application Submission Date:	08-10-2016
	Plan Submission Date:	08-18-2016
Project Description:	Walter Pelkey of BH2M has submitted a Final Subdivision Amendment Application to amend the Lindsey Road landscaped buffer for the major subdivision located off of Lindsey Road and Sanford Road to rectify cutting that occurred within the "no cut buffer" as defined on the subdivision plan. The subdivision consists of 3 lots with each lot to support a two-family residential unit (duplex) or two single family dwellings for a total of 6 dwelling units. The subdivision is located within the Residential A District. The parcels shall be served by private subsurface wastewater disposal systems and drilled wells. All lots are proposed to have driveways off of Lindsey Road.	
Approval Dates:	Preliminary Plan Approval:	Not Applicable
	Final Plan Approval:	**To be determined**
Public Hearings:	Preliminary Public Hearing	Not Applicable
	Final Public Hearing	**To be determined**

PROJECT HISTORY

1. On 8/9/16 the CEO and Planner visited the subdivision based on a cutting compliant received. A memo was prepared regarding the observed cutting and the applicant was notified.
2. On 8/10/16 the applicant submitted a subdivision amendment application.
3. On 8/12/16 the Planning Office mailed abutters notice of the subdivision amendment application.
4. On 8/18/16 the Planning Office received the draft subdivision plan for review.
5. On 8/18/16 the Planning Office prepared recommended plan changes for the applicant to address and draft completeness (202-10) and compliance (202-12) checklists.

DRAFT

Town of Wells, Maine
Planning Board

FINDINGS OF FACTS & DECISIONS
Final Subdivision Amendment Application for "Robinson Commons"

PROJECT HISTORY
6. On _____ the Planning Office received revised plans for review. 7. On _____the Planning Office prepared a memo for the applicant and Plannning Board. 8. On 8/22/16 the Planning Board received the subdivision amendment application, voted to waive a site walk; voted to find the application complete, voted to waive a public hearing, voted to find the application compliant, and voted to approve and sign the Findings of Fact & Decisions and plan.

§ 202-12. General Standards			Findings & Decisions
In reviewing applications for a subdivision, the Board shall consider the following general standards and make findings that each has been met prior to the approval of a final plan. In all instances the burden of proof shall be upon the applicant.			
A.	Conformance with Comprehensive Plan. All proposed subdivisions shall be in conformity with the Comprehensive Plan of the municipality and with the provisions of all pertinent state and local codes and ordinances.		**THE PLANNING BOARD FINDS THAT THIS STANDARD SHALL BE MET.**
B.	Retention of open spaces and natural or historic features. [Amended 6-11-2013]		**THE PLANNING BOARD FINDS THAT THIS STANDARD SHALL BE MET.**
	(1)	In any subdivision with no more than five lots or dwellings units, no dedicated open space is required. In any subdivision with at least six lots or dwelling units and no more than 10 lots or dwelling units, there shall be a minimum of 10% or 20,000 square feet, whichever is greater, of the total property net area dedicated as open space. Off site dedication of open space land may be approved by the Planning Board if excess land is provided and the land has a greater benefit to the public than land within the development. In any subdivision with more than 10 lots or dwelling units, there shall be a minimum of 35% of the total property net area dedicated as open space.	This subdivision consists of 3 lots/ 6 dwelling units and is required to provide a minimum of 10% Open Space. This subdivision proposes approximately 23% open space or 61,178 SF SF) of the 6.04 acre total subdivision area. On 11/2/15 the Planning Board found the Open Space proposed to be suitable. No change proposed in total Open Space proposed.
	(2)	Land reserved for open space purposes shall be of a character, configuration and location suitable for the particular use intended. A site intended to be used for active recreation purposes, such as a playground or a play field, should be relatively level and dry. Sites selected primarily for scenic or passive recreation purposes shall have such access as the Planning Board may deem suitable. The configuration of such sites shall be deemed adequate by the Planning Board with regard to scenic or historic attributes to be preserved, together with sufficient areas for trails, lookouts, etc., where necessary and appropriate.	See notes 22 and 25. The Open Space proposed is also a no cut buffer totaling 61,178 SF in area. This area shall remain in its natural state except for removal of dead or diseased trees; cutting for driveways for lots 1 and 2 are restricted to 24' wide. Clearing is also permitted for utility installations. See note 27 and proposed planting of white pines to remedy cutting within the "No Cut Buffer" on lots 1 and 2. Re-vegetation of this buffer shall be completed prior to the issuance of a certificate of occupancy. No structures or coverage is permitted within the Open Space except for driveways. Maintenance of the open space is the responsibility of the individual lot owners.

DRAFT

§ 202-12. General Standards			Findings & Decisions
	(3)	Reserved open space land, acceptable to the Planning Board and subdivider, may be dedicated or conveyed to the municipality, a land trust, or other recognized conservation organization. Such reservation may also be accomplished by incorporation into homeowners' association or condominium association documents or into restrictive deed covenants. (See § **145-49**, residential cluster development standards.)	No such reservation proposed.
	(4)	The Planning Board may require that the development plans include a landscape plan that will show the preservation of any existing trees larger than 24 inches in diameter at breast height, the replacement of trees and vegetation, graded contours, streams and the preservation of scenic, historic or environmentally significant areas. Cutting of trees on the northerly borders of lots should be avoided as far as possible, to retain a natural wind buffer.	See notes 22 and 25. The Open Space proposed is also a no cut buffer totaling 61,178 SF in area. This area shall remain in its natural state except for removal of dead or diseased trees; cutting for driveways for lots 1 and 2 are restricted to 24' wide. Clearing is also permitted for utility installations. See note 27 and proposed planting of white pines to remedy cutting within the "No Cut Buffer" on lots 1 and 2. Re-vegetation of this buffer shall be completed prior to the issuance of a certificate of occupancy. No structures or coverage is permitted within the Open Space except for driveways. Maintenance of the open space is the responsibility of the individual lot owners.
C.	Blocks. Where street lengths exceed 1,000 feet between intersections with other streets, the Board may require an utility/pedestrian easement, at least 20 feet in width, to provide for underground utility crossings and/or a pedestrian pathway of at least five feet in width. Maintenance obligations of the easement shall be included in the written description of the easement.		No streets proposed. **THE PLANNING BOARD FINDS THAT THIS STANDARD SHALL NOT APPLY.**
D.	Lots.		**THE PLANNING BOARD FINDS THAT THIS STANDARD SHALL BE MET.**
	(1)	All lots shall meet the minimum requirements of Chapter 145, Land Use, for the zoning district in which they are located. The lot configuration should be designed to maximize the use of solar energy on building sites with suitable orientation.	§145-21. Residential A District requirements apply to the 3 lots/ 6 dwelling units. The 3 lots shall meet the dimensional requirements of 145-21. See note 10.
	(2)	Lot configuration and area shall be designed to provide for adequate off-street parking and service facilities based upon the type of development contemplated. Wherever possible, parking areas shall be laid out to coincide with building locations to maximize solar energy gain.	All driveways shall be designed to comply with Chapter 201 and must provide an on-site turnaround so vehicle are not backing out on to roadways. See note 14.
	(3)	Lots with multiple frontages shall be avoided wherever possible. When lots do have frontage on two or more roads, the plan and deed restrictions shall indicate that vehicular access shall be located only on the less traveled way.	Lots 1, 2, and 3 shall have driveways off of Lindsay Road only. See note 21.
	(4)	Wherever possible, side lot lines shall be perpendicular to the street.	
	(5)	The subdivision of tracts into parcels with more than twice the required minimum lot size shall be laid out in such a manner as to preclude future resubdivision.	Proposed lots are more than twice the required minimum lot size but density is maximized for each lot proposed as two dwelling units are proposed on each lot. Changes to this plan requires Planning Board approval.

DRAFT

§ 202-12. General Standards			Findings & Decisions
	(6)	Where public utilities could be extended to the subdivision in the foreseeable future, the subdivision shall be designed to accommodate the extensions of utilities.	Extensions of such utilities in this area are not planned for the foreseeable future. Lots shall be served by private individual septic systems and private individual drilled wells.
	(7)	If a lot on one side of a river, tidal water, road or other similar barrier fails to meet the minimum requirements for lot size, it may not be combined with a lot on the other side of the river, tidal water or road to meet the minimum lot size.	
	(8)	Odd-shaped lots in which narrow strips are joined to other parcels in order to meet minimum lot size requirements are prohibited. The ratio of lot length to width shall not be more than three to one.	Lots are not odd shaped.
	(9)	Lots shall be numbered in accordance with Chapter 201, Article I, Street Naming and Numbering, of the Wells Municipal Code.	
	(10)	Where the Board finds that safety considerations so require, driveways of adjoining lots shall be combined or joined so as to minimize the number of driveway entrances and maximize the distance between entrance points.	On 11/16/15 the Planning Board found that shared driveways are not required. Minor adjustments to driveway locations are proposed.
	(11)	Proposed lots shall not be permitted to have driveway entrances onto existing arterial or collector streets unless the Planning Board determines that no reasonable alternate exists.	Lots 1, 2, and 3 shall have driveways off of Lindsay Road only. See note 21. Driveways shall not be located off of Sanford Road.
E.	Utilities.		**THE PLANNING BOARD FINDS THAT THIS STANDARD SHALL BE MET.**
	(1)	Utilities shall be installed underground except as otherwise approved by the Board.	Note 13 requires electrical cable and telephone lines to be installed overhead off of existing poles. On 10/5/15 the Planning Board granted a waiver and permitted overhead utilty connections. No change in utiltiy connections proposed.
	(2)	Underground utilities shall be installed prior to the installation of the final gravel base of the road.	No road is proposed. Overhead utility connections are proposed.
	(3)	The size, type and location of streetlights, electric and gas lines, telephone and other utilities shall be shown on the plan and approved by the Board.	Existing utility pole locations shown along Lindsey Road.
F.	Required improvements. The following improvements are required for all subdivisions unless waived by the Board in accordance with provisions of these regulations.		
	(1)	Monuments.	**THE PLANNING BOARD FINDS THAT THIS STANDARD SHALL BE MET.** Parcel corners are shown to have Monumentation. On 11/16/15 the Planning Board found the Monumentation proposed to be acceptable. No changes to Monumentation proposed.
		(a) Stone or concrete monuments shall be set at all street intersections and points of curvature, but no further than 750 feet apart along street lines without curves or intersections.	

DRAFT

§ 202-12. General Standards			Findings & Decisions
		(b) Stone or concrete monuments shall be set at all corners and angle points of the subdivision boundaries where the interior angle of the subdivision boundaries is 135º or less. New monumentation shall not be required at corner or angle points where there is existing monumentation that complies with this section.	
		(c) Stone monuments shall be a minimum of four inches square at the top and four feet in length and set in the ground at final grade level. After they are set, drill holes one-half-inch deep shall locate the point or points described above.	
		(d) Concrete monuments shall be portland cement reinforced with half-inch reinforcement bar. Concrete monuments shall be either four inches square or four inches in diameter and four feet in length and set in the ground at final grade with their top flush to four inches above the final grade.	
		(e) All other subdivision boundary corners and angle points, as well as all lot boundary corners and angle points, shall be marked by suitable monumentation.	Parcel corners are shown to have Monumentation. On 11/16/15 the Planning Board found the Monumentation proposed to be acceptable. No changes to Monumentation proposed.
	(2)	Water supply.	**THE PLANNING BOARD FINDS THAT THIS STANDARD SHALL BE MET.**
		(a) When a subdivision is to be served by the Kennebunk, Kennebunkport and Wells Water District, the complete supply system, including fire hydrants, shall be installed at the expense of the subdivider.	Subdivision not served by the KKW Water District.
		[1] The subdivider shall provide a written statement from the Water District that adequate water for both domestic and fire-fighting purposes can be provided without placing an undue burden on the source, treatment facilities or distribution system involved. The subdivider shall be responsible for paying the costs of system improvements necessary to serve the subdivision.	
		[2] The size and location of mains, gate valves, hydrants and service connections shall be reviewed and approved in writing by the Water District and the Fire Chief.	
		(b) When the location of a subdivision does not allow for a financially reasonable connection to the Kennebunk, Kennebunkport and Wells Water District, the Planning Board may allow the use of individual wells or a private community water system.	The subdivision shall have individual drilled wells for the 3 lots/ 6 dwelling units. The plan depicts "well zones" where a well is permitted to be installed. No change to "well zones" proposed. See note 12 which states that wells shall be located in the well zone and be a minimum of 100 feet from any septic system.

DRAFT

§ 202-12. General Standards		Findings & Decisions
	[1] Dug wells shall be permitted only if it is demonstrated to be not economically feasible to develop other groundwater sources and shall be constructed so as to prevent infiltration of surface water into the well. Unless otherwise permitted by the Board, the subdivider shall prohibit dug wells by deed restrictions and a note on the plan.	See note 12. Dug wells are prohibited.
	[2] If a central water supply system is provided by the subdivider, the location and protection of the source and the design, construction and operation of the system shall conform to the standards of the Maine Rules Relating to Drinking Water (10-144 A.C.M.R. 231).	Not applicable.
	[3] Fire protection. **[Amended 3-11-2002]**	**THE PLANNING BOARD FINDS THAT THIS STANDARD SHALL BE MET.**
	[a] The subdivider shall construct dry hydrants connected to ponds or water storage tanks, provide fire hydrants connected to a public water source or implement an alternative program approved by the Fire Chief to provide for adequate water for fire-fighting purposes within the subdivision. An easement shall be granted to the municipality providing access to the hydrants or other improvements where necessary. If a subdivision has fewer than 10 lots or dwelling units or any combination of lots and dwelling units, the Board, may waive the requirement for an adequate on-site water supply only upon submittal of evidence that:	The subdivision lots driveways are located within 1 mile of the existing fire pond/hydrant located at the Wells Rec off of Branch Road and within 1 mile of the existing Route 109 fire pond/hydrant located to the west. See draft Fire Chief letter dated 11-16-15. No changes to fire protection proposed.
	[i] There is a fire pond, fire hydrant connected to public water, or another water source within one mile of the subdivision that the subdivider has obtained the legal right to use for fire protection purposes; and	Both fire ponds/ hydrants within 1 mile are owned by the Town of Wells. No changes to fire protection proposed.
	[ii] The Fire Chief has determined that the proposed water source has sufficient capacity to serve the needs of the subdivision and any other subdivisions currently using or relying on the water source for fire protection.	See draft Fire Chief letter dated 11-16-15.
	[b] For purposes of this section, the 1-mile distance is measured from the pond, water source or fire hydrant to the driveway of the subdivision residence located farthest from the water supply along routes that fire trucks can safely travel year round.	The subdivision lots driveways are located within 1 mile of the existing fire pond/hydrant located at the Wells Rec off of Branch Road and within 1 mile of the existing Route 109 fire pond/hydrant located to the west. No changes to fire protection proposed.

DRAFT

§ 202-12. General Standards	Findings & Decisions
[4] The results of the water quality test submitted shall indicate that the groundwater meets the primary drinking water standards of the Maine Rules Relating to Drinking Water for those categories tested. If the Board has reason to believe, due to previous uses of the property or due to previous or existing uses of neighboring property, that the existing water quality may be threatened by contaminants not tested for in the primary inorganic water analysis, it may require the water to be tested for those contaminants.	This is a condition of approval to be provided prior to the issuance of a building permit.
(c) Prior to the issuance of a building permit for the construction of any principal structure in a subdivision, the applicant shall present evidence of suitable water supply to the Code Enforcement Officer. This evidence shall consist of:	This is a condition of approval.
[1] A letter from the Kennebunk, Kennebunkport and Wells Water District indicating availability of service; or	Not applicable.
[2] The results of a primary inorganic water analysis performed upon the well to serve the structure indicating the groundwater meets the primary drinking water standards of the Maine Rules Relating to Drinking Water for those categories tested.	This is a condition of approval.
(3) Sewage disposal.	**THE PLANNING BOARD FINDS THAT THIS STANDARD SHALL BE MET.**
(a) Public system.	Subdivision not served by the Wells Sanitary District.
[1] A sanitary sewer system shall be installed at the expense of the subdivider when there is a public sanitary sewer line located within 1,000 feet of the proposed subdivision at its nearest point. The Wells Sanitary District shall certify that providing service to the proposed subdivision is within the capacity of the district's collection and treatment system.	
[2] The district shall review and approve in writing the construction drawings for the sewage system.	
(b) Private systems.	Subdivision shall be served by individual subsurface wastewater disposal systems. See note 11. See note 11 stating Minor deviations is subsurface system placement shall be approved by the Town Code Officer (+ 10 feet). No changes to septic systems proposed. Test pit limiting factor for lot 3's existing leach field noted. Former leachfield labelled.

DRAFT

§ 202-12. General Standards			Findings & Decisions
		[1] The developer shall submit evidence of soil suitability for subsurface sewage disposal prepared by a Maine licensed site evaluator in full compliance with the requirements of the State of Maine Subsurface Wastewater Disposal Rules. In addition, on lots in which the limiting factor has been identified as being within 24 inches of the surface, a second site with suitable soils shall be shown as a reserve area for future replacement of the disposal area. The reserve areas shall be shown on the plan and restricted so as not to be built upon.	Test pits provided for all lots by Mark Hampton Associates Inc., Mark J. Hampton, LSE #263, CSS#216 dated 8/31/15.
		[2] In no instances shall a disposal area be permitted on soils or on a lot which requires a new system variance from the subsurface wastewater disposal rules.	
	(4)	Stormwater management. **[Amended 4-27-2007]**	**THE PLANNING BOARD FINDS THAT THIS STANDARD SHALL BE MET.** No road construction required. See note 16 requiring Low Impact Development (LID) methods to be installed for each building. Planning Board granted a waiver of requiring a stormwater management plan on 11/2/15. No changes to stormwater management proposed.
		(a) Where a subdivision is traversed by a stream, river or surface water drainageway, or where the Board feels that surface water runoff to be created by the subdivision should be controlled, there shall be provided easements or drainage rights-of-way with swales, culverts, catch basins or other means of channeling surface water within the subdivision and over other properties. This stormwater management system shall be designed by a registered professional engineer.	
		(b) Drainage easements for existing watercourses or proposed drainageways shall be provided and indicated on the plan.	
		(c) The developer shall provide a statement from the designing engineer that the proposed subdivision will not create erosion, drainage or runoff problems either in the subdivision or in other properties. The engineer shall certify that peak runoff from the subdivision onto other properties shall not be increased either in volume or duration from the peak runoff characteristics existing prior to development.	
		(d) A stormwater management plan, meeting the standards of Chapter 201, Streets and Sidewalks, Articles II and III, Wells Municipal Code, shall be submitted.	
		(e) For subdivisions that require MDEP review under 38 M.R.S.A. § 481 et seq. (Site Location of Development), a stormwater management plan shall be submitted which complies with the Site Location of Development permit and the requirements of MDEP Chapter 500 Stormwater Regulations.	

DRAFT

§ 202-12. General Standards	Findings & Decisions
(f) For subdivisions that do not require a Site Location of Development permit, but that require a MDEP permit pursuant to 38 M.R.S.A. § 420-D, a stormwater management plan shall be submitted which complies with the requirements of MDEP Chapter 500 Stormwater Regulations.	
(g) For subdivisions outside of the watershed of a great pond that neither require a Site Location of Development permit, nor a MDEP permit pursuant to 38 M.R.S.A. § 420-D, a stormwater management plan shall be submitted which incorporates the low-impact development techniques set forth in Volume I, Chapter 3 of the Maine Stormwater Best Management Practices Manual, 2006 (LID Techniques) on each individual lot approved by the Planning Board when such LID Techniques are adopted by MDEP. At such time that the MDEP adopts the LID Techniques, the Planning Board shall adopt them for use in approving subdivisions for the Town of Wells.	
(h) For subdivisions located within the watershed of a great pond containing: 1. five or more lots or dwelling units created within any five-year period; or 2. any combination of 800 linear feet of new or upgraded driveways and/or streets, a stormwater management plan shall be submitted that meets the phosphorus allocation across the entire subdivision in accordance with the methodology described in the MDEP Phosphorus Design Manual, Volume II of the Maine Stormwater Best Management Practices Manual, 2006.	
(i) The Planning Board may require a hydrologic analysis for any site in areas with a history of flooding or in areas with a potential for future flooding, associated with cumulative impacts of development. This hydrologic analysis would be in the form of a "Downstream Analysis" under conditions of the ten-year, twenty-four-hour storm, the twenty-five-year, twenty-four-hour storm, and the one-hundred-year, twenty-four-hour storm, as described below:	
[1] Downstream Analysis Methodology: The criteria used for the downstream analysis is referred to as the "10% rule." Under the 10% rule, a hydrologic and hydraulic analysis for the ten-year, twenty-four-hour storm, the twenty-five-year, twenty-four-hour storm, and the one-hundred-year, twenty-four-hour storm is extended downstream to the point where the site represents 10% of the total drainage area. For example, a ten-acre site would be analyzed to the point downstream with a drainage area of 100 acres. This analysis should compute flow rates and velocities downstream to the location of the 10% rule for present conditions and proposed conditions. If the flow rates and velocities increase by more than 5% and/or if any existing downstream structures are impacted, the designer should redesign and incorporate detention facilities.	

DRAFT

§ 202-12. General Standards			Findings & Decisions
G.	Streets.		**THE PLANNING BOARD FINDS THAT THIS STANDARD SHALL BE MET.**
	(1)	All streets in a subdivision shall meet Chapter 201, Streets and Sidewalks, Articles II and III, Wells Municipal Code.	No streets are proposed.
	(2)	Any subdivision expected to generate average daily traffic of 200 trips per day or more shall have at least two street connections with existing public streets, streets shown on an Official Map or streets on an approved subdivision plan for which performance guaranties have been filed and accepted. Any street with an average daily traffic of 200 trips per day or more shall have at least two street connections leading to existing public streets, streets shown on an Official Map or streets on an approved subdivision plan for which performance guaranties have been filed and accepted. Said two street connections' center lines shall be no closer than 400 linear feet apart. Traffic generation rates shall be based on the Traffic Generation Manual, 1988 Edition, Institute of Transportation Engineers. Some typical traffic generation rates are:	The subdivision is not expected to generate a daily traffic of 200 trips per day or more. Traffic generation is calculated to be 60 trips per day.
		(a) Single-family house: 10.0 trips per day per unit.	6 x 10.0 = 60.00 trips per day for the subdivision
		(b) Residential condominium: 5.9 trips per day per unit.	
		(c) Motel: 10.2 trips per day per room.	
		(d) Industrial: 7.0 trips per day per 1,000 square feet of floor space.	
	(3)	In any subdivisions located in the Residential A Zoning District or east of U.S. Route 1 provisions shall be made for the interconnection of proposed streets with other subdivisions or adjacent properties if it is determined to be practical and desirable by the Planning Board.	No streets are proposed.
H.	Land features.		**THE PLANNING BOARD FINDS THAT THIS STANDARD SHALL BE MET.**
	(1)	Topsoil shall be considered part of the subdivision and shall not be removed from the site except for surplus topsoil from roads, parking areas and building excavations. Topsoil shall not be removed from the site until completion of construction and inspection by the Town to assure four inches of topsoil has been spread over all areas to be grassed.	This is a condition of approval.
	(2)	Except for normal thinning, landscaping and cutting trees to provide access to direct sunlight, existing vegetation shall be left intact to prevent soil erosion. The Board shall require a developer to take the following measures to correct and prevent soil erosion in the proposed subdivision: **[Amended 4-27-2007]**	This is a condition of approval.
		(a) The proposed subdivision shall prevent soil erosion and sedimentation from entering waterbodies, wetlands, and adjacent properties.	
		(b) The procedures outlined in the erosion and sedimentation control plan shall be implemented during the site preparation, construction, and clean-up stages.	

DRAFT

§ 202-12. General Standards			Findings & Decisions
		(c) Cutting or removal of vegetation along waterbodies shall not increase water temperature or result in shoreline erosion or sedimentation.	
		(d) Topsoil shall be considered part of the subdivision and shall not be removed from the site except for surplus topsoil from roads, parking areas, and building excavations.	
	(3)	To prevent soil erosion of shoreline areas the cutting or removal of vegetation shall only be permitted as regulated in § 145-33 of Chapter 145, Land Use, of the Wells Municipal Code.	This is a condition of approval.
	(4)	Dedication and maintenance of common open space and services.	See notes 22 and 25. The Open Space proposed is also a no cut buffer totaling 61,178 SF in area. This area shall remain in its natural state except for removal of dead or diseased trees; cutting for driveways for lots 1 and 2 are restricted to 24' wide. Clearing is also permitted for utility installations. See note 27 and proposed planting of white pines to remedy cutting within the "No Cut Buffer" on lots 1 and 2. Re-vegetation of this buffer shall be completed prior to the issuance of a certificate of occupancy. No structures or coverage is permitted within the Open Space except for driveways. Maintenance of the open space is the responsibility of the individual lot owners.
		(a) All common land shall be owned jointly or in common by the owners of the dwelling units by means of a homeowners' association, by an association which has as its principal purpose the conservation or preservation of land in essentially its natural condition or by the municipality.	A homeowners association is not proposed. Owners of lots 1, 2, and 3 shall have passive recreation use of all open space within the subdivision. Such a provision shall be noted within the deed for each parcel.
		(b) Further subdivision of the common land or its use for other than noncommercial recreation or conservation purposes, except for easements for underground utilities, shall be prohibited. Structures and buildings accessory to noncommercial recreational or conservation uses may be erected on the common land.	See note 25.
		(c) The common open space shall be shown on the final plan with appropriate notation on the plan to indicate that:	See note 25.
		[1] It shall not be used for future building lots; and	
		[2] A part or all of the common open space may be dedicated for acceptance by the municipality.	
		(d) If any or all of the common open space and services are to be reserved for use by the residents, the bylaws of the proposed homeowners' association shall specify maintenance responsibilities and shall be submitted to the Board prior to final plan approval.	A homeowners association is not proposed. Owners of lots 1, 2, and 3 shall have passive recreation use of all open space within the subdivision. Such a provision shall be noted within the deed for each parcel. See note 25. Maintenance and management is the responsibility of the lot owner for which open space areas are located on their individual lot.

DRAFT

§ 202-12. General Standards			Findings & Decisions
		(e) Covenants for mandatory membership in the homeowners' association setting forth the owners' rights, interests and privileges in the association and the common property shall be reviewed by the Board and included in the deed for each lot or dwelling.	A homeowners association is not proposed.
		(f) The homeowners' association shall have the responsibility of maintaining the common property.	A homeowners association is not proposed.
		(g) The association shall levy annual charges against all owners of dwelling units to defray the expenses connected with the maintenance of common property and tax assessments.	A homeowners association is not proposed.
		(h) The developer or subdivider shall maintain control of the common property and be responsible for its maintenance until development sufficient to support the association has taken place.	See note 25. Maintenance and management is the responsibility of the lot owner for which open space areas are located on their individual lot.
	(5)	Construction in flood hazard areas. When any part of a subdivision is located in a special flood hazard area as identified by the Federal Emergency Management Agency, the plan shall conform with Chapter 115, Floodplain Management, of the Wells Municipal Code.	No flood zone is present for the parcel per FEMA Map 2301580013D.
	(6)	Impact on groundwater.	
		(a) When a hydrogeologic assessment is submitted, the assessment shall contain at least the following information:	A groundwater nitrate evaluation was not required by the Planning Board on 10/5/2015 based on a letter from Mark Hampton discussing soil types, and no nitrate plumes are expected beyond the standard 100' setback required between a septic system and a well. Mr. Livingston agreed with the analysis. Since the subdivision is bounded by Route 109 and Lindsey Road, plumes could not reach other properties. No changes to septic systems proposed.
		[1] A map showing the basic soils types.	
		[2] The depth of the water table at representative points throughout the subdivision.	
		[3] Drainage conditions throughout the subdivision.	
		[4] Data on the existing groundwater quality, either from test wells in the subdivision or from existing wells on neighboring properties.	
		[5] An analysis and evaluation of the effect of the subdivision on groundwater resources. In the case of residential developments, the evaluation shall, at a minimum, include a projection of post-development nitrate-nitrogen concentrations at any wells within the subdivision, at the subdivision boundaries and at a distance of 1,000 feet from potential contamination sources, whichever is a shorter distance. For subdivisions within the watershed of a pond, projections of the development's impact on groundwater phosphate concentrations shall also be provided.	
		[6] A map showing the location of any subsurface wastewater disposal systems and drinking water wells within the subdivision and within 200 feet of the subdivision boundaries.	

DRAFT

§ 202-12. General Standards			Findings & Decisions
		(b) Projections of groundwater quality shall be made at any wells within the subdivision and at the subdivision boundaries or at a distance of 500 feet from potential contamination sources, whichever is a shorter distance.	
		(c) Projections of groundwater quality shall be based on the assumption of drought conditions (assuming 60% of annual average precipitation).	
		(d) No subdivision shall increase any contaminant concentration in the groundwater to more than 1/2 of the primary drinking water standards. No subdivision shall increase any contaminant concentration in the groundwater to more than the secondary drinking water standards.	
		(e) If groundwater contains contaminants in excess of the primary standards and the subdivision is to be served by on-site groundwater supplies, the applicant shall demonstrate how water quality will be improved or treated.	
		(f) If groundwater contains contaminants in excess of the secondary standards, the subdivision shall not cause the concentration of the parameters in question to exceed 150% of the ambient concentration.	
		(g) Subsurface wastewater disposal systems and drinking water wells shall be constructed as shown on the map submitted with the assessment. If construction standards for drinking water wells are recommended in the assessment, those standards shall be included as a note on the final plan and as restrictions in the deeds to the affected lots.	

§ 202-13. Performance Guaranties. [Amended 4-12-1999]			Findings & Decisions
A.	Types of guaranties.		
	(1)	With submittal of the application for final plan approval, the applicant shall provide any one or a combination of the following performance guaranties for an amount adequate to cover the total site preparation and construction costs of all required improvements, taking into account the time span of the construction schedule and the inflation rate for construction costs:	**THE PLANNING BOARD FINDS THAT THIS STANDARD SHALL BE MET.** See note 20. Monumentation shall be installed prior to conveyance of any lot or issuance of any building permit. White pine re-vegetation required per note 27 shall be completed prior to the issuance of a certificate of occupancy. A performance guarantee is not required. No road or drainage systems are proposed or required as part of this subdivision development. A pre-construction meeting is not necessary.
		(a) Either a certified check payable to the municipality or a savings account or certificate of deposit naming the municipality as owner for the establishment of an escrow account.	

DRAFT

		(b) A performance bond payable to the municipality issued by a surety company approved by the municipal officers or Town Manager.	
		(c) An irrevocable letter of credit (See Appendix B for a sample. Note: Appendix B, originally attached to the Subdivision Regulations, has not been reproduced in the Code. Consult the original Town records in the office of the Clerk.) from a financial institution establishing funding for the construction of the subdivision from which the municipality may draw if construction is inadequate, approved by the municipal officers or Town Manager.	
		(d) An offer of conditional approval prohibiting the sale of any units or lots until all required improvements serving those units or lots have been constructed to the satisfaction of the Town and in compliance with all ordinances, plans and specifications.	
	(2)	The conditions and amount of the performance guaranty shall be determined by the Board with the advice of the Town Planner, Road Commissioner, municipal officers and/or Town Attorney. If an offer of conditional approval is made by the applicant, pursuant to Subsection A(1)(d), the applicant shall be required, in addition, to present a cash escrow, performance bond or irrevocable letter of credit, as described in Subsections A(1)(a) through (c) above, to cover the cost of restoring the site to a stable condition, should the applicant create erosion or sedimentation problems for an unreasonable duration during site preparation or during the construction of roads and/or utilities or other required improvements.	**THE PLANNING BOARD FINDS THAT THIS STANDARD SHALL BE MET.** A performance guarantee is not required. No road or drainage systems are proposed or required as part of this subdivision development. A pre-construction meeting is not necessary.
B.	**Contents of guaranty.** The performance guaranty shall contain a construction schedule, cost estimates for each major phase of construction, taking into account inflation, provisions for inspections of each phase of construction, provisions for the release of part or all of the performance guaranty to the developer and a date after which the applicant will be in default, and the municipality shall have access to the funds to finish construction. The Board may require the services of a third party inspector, to be paid for at the expense of the applicant upon recommendation of the Town Manager.		**THE PLANNING BOARD FINDS THAT THIS STANDARD SHALL BE MET.** A performance guarantee is not required. No road or drainage systems are proposed or required as part of this subdivision development. A pre-construction meeting is not necessary.
C.	**Escrow account.** If the applicant chooses to establish an escrow account, a cash contribution to the account shall be made by either a certified check made out to the municipality, the direct deposit into a savings account or the purchase of a certificate of deposit. For any account opened by the applicant, the municipality shall be named as owner or co-owner, and the consent of the municipality shall be required for a withdrawal. Any interest earned on the escrow account shall be returned to the applicant unless the municipality has found it necessary to draw on the account, in which case the interest earned shall be proportionately divided between the amount returned to the applicant and the amount withdrawn to complete the required improvements. The Town Attorney and Town Treasurer shall review and have final authorization on the establishment of escrow accounts.		**THE PLANNING BOARD FINDS THAT THIS STANDARD SHALL BE MET.** A performance guarantee is not required. No road or drainage systems are proposed or required as part of this subdivision development. A pre-construction meeting is not necessary.

DRAFT

D.	**Performance bond.** If the applicant chooses to submit a performance bond, the performance bond shall detail any special conditions, the method for release of the bond or portions of the bond to the applicant and the procedures for collection by the municipality. The bond documents shall specifically reference the subdivision for which approval is sought.	**THE PLANNING BOARD FINDS THAT THIS STANDARD SHALL BE MET.** A performance guarantee is not required. No road or drainage systems are proposed or required as part of this subdivision development. A pre-construction meeting is not necessary.
E.	**Letter of credit.** If the applicant chooses to submit an irrevocable letter of credit from a bank or other lending institution, at a minimum the letter shall indicate that funds have been set aside for the construction of the subdivision and may not be used for any other project or loan. The Town Manager or Town Treasurer shall certify the bank or institution as acceptable to the Town. The Town Attorney shall review and, if found acceptable, approve the wording of all letters of credit.	**THE PLANNING BOARD FINDS THAT THIS STANDARD SHALL BE MET.** A performance guarantee is not required. No road or drainage systems are proposed or required as part of this subdivision development. A pre-construction meeting is not necessary.
F.	**Standard condition of approval**. As a standard condition of approval for all applications for which a performance guaranty is required pursuant to Subsection **K**, the Board shall require the applicant to enter into a binding agreement with the municipality regarding the development of the required improvements and the sale of lots or units in the subdivision until such time as one or more of the allowable performance guaranties have been accepted by the municipality.	**THE PLANNING BOARD FINDS THAT THIS STANDARD SHALL BE MET.** A performance guarantee is not required. No road or drainage systems are proposed or required as part of this subdivision development. A pre-construction meeting is not necessary.
	(1) The agreement shall prohibit the sale or occupancy of any lot or unit in the subdivision for which the improvements to be covered by the guaranty are required for access to or intended use of the lot until either:	
	(a) It is certified by the Board, or its agent, that all of the required improvements have been installed in accordance with these regulations and the regulations of the appropriate utilities; or	
	(b) A performance guaranty, acceptable to the municipality, is submitted in an amount necessary to cover the completion of the required improvements at an amount adjusted for inflation and prorated for the portions of the required improvements already installed.	
	(2) Notice of the agreement and any conditions shall be on the final plan that is recorded at the Registry of Deeds. Release from the agreement shall follow the procedures for release of the performance guaranties contained in Subsection **H**.	
G.	**Phasing of development.** The Board may approve plans to develop a major subdivision in separate and distinct phases. This may be accomplished by limiting final approval to those lots abutting that section of the proposed subdivision street which is covered by a performance guaranty. When development is phased, road construction shall commence from an existing public way. The subdivision shall be divided in such a manner that each phase, when aggregated with the previous phase(s), shall meet the standards of these regulations. Final approval of lots in subsequent phases shall be given only upon satisfactory completion of all requirements pertaining to previous phases.	**THE PLANNING BOARD FINDS THAT THIS STANDARD SHALL BE MET.** Phasing of the subdivision is not proposed.

DRAFT

H.	**Release of guaranty**. Prior to the release of any part of the performance guaranty, the Board shall determine to its satisfaction, in part upon the report of the Town Manager and whatever other agencies and departments may be involved, that the proposed improvements meet or exceed the design and construction requirements for that portion of the improvements for which the release is requested.	**THE PLANNING BOARD FINDS THAT THIS STANDARD SHALL BE MET.** A performance guarantee is not required. No road or drainage systems are proposed or required as part of this subdivision development. A pre-construction meeting is not necessary.
I.	**Default.** If upon inspection the third party inspector, Municipal Engineer or other qualified individual retained by the municipality finds that any of the required improvements have not been constructed in accordance with the plans and specifications filed as part of the application, he or she shall so report in writing to the Code Enforcement Officer, the municipal officers, the Board and the applicant or builder. The municipal officers shall take any steps necessary to preserve the municipality's rights.	**THE PLANNING BOARD FINDS THAT THIS STANDARD SHALL BE MET.**
J.	**Private streets.** Where the subdivision streets are to remain private streets, the following words shall appear on the recorded plan: "All streets in this subdivision shall remain private roads to be maintained to Town standards by the developer or the lot owners and shall not be accepted or maintained by the Town."	**THE PLANNING BOARD FINDS THAT THIS STANDARD SHALL NOT APPLY.** No streets are proposed.
K.	**Improvements guaranteed.** Performance guaranties shall be tendered for all improvements required to meet the standards of these regulations and for the construction of the public or private streets, stormwater management facilities, public or private sewage collection or disposal facilities and water systems that are shared by multiple dwelling units and erosion and sedimentation control measures, as well as any other improvements required by the Board.	**THE PLANNING BOARD FINDS THAT THIS STANDARD SHALL BE MET.** A performance guarantee is not required. No road or drainage systems are proposed or required as part of this subdivision development. A pre-construction meeting is not necessary.

§ 202-2. Purpose, criteria for approval.			Findings & Decisions
The purposes of these regulations are to assure the comfort, convenience, safety, health and welfare of the people of the Town of Wells, to protect the environment and to promote the development of an economically sound and stable community. To this end, in approving subdivisions within the Town of Wells, Maine, the Planning Board shall consider the following criteria and, before granting approval, shall make findings of fact that the provisions of these regulations have been met and that the proposed subdivision will meet the guidelines of 30-A M.R.S.A. § 4404.			
A.	The subdivision:		**The Planning Board finds that these standards shall be met.**
	(1)	Will not result in undue water or air pollution. In making this determination, the Board shall at least consider the elevation of the land above sea level and its relation to the floodplains; the nature of soils and subsoils and their ability to adequately support waste disposal; and the slope of the land and its effect on effluents;	
	(2)	Has sufficient water available for the reasonably foreseeable needs of the subdivision;	
	(3)	Will not cause an unreasonable burden on an existing water supply, if one is to be utilized;	

DRAFT

	(4)	Will not cause unreasonable soil erosion or reduction in the capacity of the land to hold water so that a dangerous or unhealthy condition may result;	
	(5)	Will not cause unreasonable highway or public road congestion or unsafe conditions with respect to use of the highways or public roads existing or proposed;	
	(6)	Will provide for adequate solid and sewage waste disposal;	
	(7)	Will not cause an unreasonable burden on the ability of the Town to dispose of solid waste and sewage if municipal services are to be utilized;	
	(8)	Will not have an undue adverse effect on the scenic or natural beauty of the area, aesthetics, historic sites or rare and irreplaceable natural areas or any public rights for physical or visual access to the shoreline;	
	(9)	Is in conformance with this chapter, the Comprehensive Plan for the Town and Chapter 145, Land Use, of the Wells Municipal Code, as amended;	
	(10)	Whenever situated, in whole or in part, within 250 feet of any pond, lake, river or tidal waters, will not adversely affect the quality of the body of water or unreasonably affect the shoreline of that body of water; and	
	(11)	Will not, alone or in conjunction with existing activities, adversely affect the quality or quantity of groundwater;	
B.	The subdivider has adequate financial and technical capacity to meet the above-stated standards;		**The Planning Board finds that these standards shall be met.**
C.	If any part of a subdivision is located in a flood-prone area, as indicated on the Federal Emergency Management Agency's Flood Boundary and Floodway Maps and Flood Insurance Maps, the subdivider shall determine the one-hundred-year flood elevation and flood hazard boundaries within the subdivision. The proposed subdivision plan shall include a condition requiring that principal structures will be constructed with their lowest floor, including the basement, at least one foot above the one-hundred-year flood elevation; and		**Not applicable.**
D.	The long-term cumulative effects of the proposed subdivision will not unreasonably increase a great pond's phosphorous concentration during the construction phase and life of the proposed subdivision.		**Not applicable.**

STANDARD CONDITIONS OF APPROVAL

1. Any subdivision not recorded in the Registry of Deeds within 90 days of the date upon which the plan is approved and signed by the Board shall become null and void, unless an extension is granted by the Board in writing before the expiration of the ninety-day period. (§202-9C(2))

2. Prior to the issuance of a building permit for a principal structure in the subdivision, the applicant shall present evidence of suitable water supply to the Code Enforcement Officer. The evidence shall consist of the results of a primary inorganic water analysis performed upon the well to serve the structure, indicating the groundwater meets the primary drinking water standards of the Maine Rules Relating to Drinking Water for those categories tested. (§202-12F(2)(b)[4])

3. Prior to the issuance of a building permit in any approved subdivision, the subdivider shall provide the Code Enforcement Officer with a letter from a registered land surveyor stating that all monumentation shown on the plan for the lot receiving the building permit and for the approved subdivision perimeter boundaries or phase therein as approved by the Planning Board has been installed. (§202-11A(5))

DRAFT

4. No changes, erasures, modifications or revisions shall be made in any final plan after approval has been given by the Planning Board and endorsed in writing on the plan, unless the revised final plan is first submitted and the Board approves any modifications, except in accordance with § 202-10A(3). (§202-9C(4))

5. The approval by the Board of a subdivision plan shall not be deemed to constitute or be evidence of any acceptance by the municipality of any street, easement or other area shown on such plan. (§202-9C(5))

6. Failure to commence substantial construction of the subdivision within five years of the date of approval and signing of the plan shall render the plan null and void. (§202-9C(6))

SPECIAL CONDITIONS OF APPROVAL

1. All previous Conditions of Approval will remain in effect unless amended by this application. The approval of this Amended Site Plan in no way negates the need for applicant compliance with all previously set Conditions of Approval.

Dated at Wells, Maine this _____ day of _____, 2016

Wells Planning Board

By: _____
Charles Millian, Chairman

DRAFT

TOWN OF WELLS, MAINE

208 Sanford Road, PO Box 398
Wells, Maine, 04090
Phone: 207-646-5187, Fax: 646-2935
Website: **www.wellstown.org**

Amendment ✓
(Revision involves only modifications to plan- no new lots or road proposed)

New _____

For Office Use Only
Fee Paid $100.00

Received 8-10-16

FINAL SUBDIVISION APPLICATION - §202-9

1. Project/Subdivision Name: Robinson Corrosion

2. Property Owner: Craig Robinson

   Mailing Address: 542 A LINDSEY RD.

   Telephone: (415) 702-7500 Fax: _____

   Email Address: cbrandonrobinson@yahoo.com

3. Applicant/Agent (if different from owner): _____

   Mailing Address: _____

   Telephone: _____ Fax: _____

   Email Address: _____

4. Engineer or Surveyor who prepared plan: H2BM WALTER PELKY

   Mailing Address: 28 STATE STREET
   GORHAM, MAINE 04038

   Telephone: 207 839 2771 Fax: 207 839 8250

   Email Address: wpelkey@bh2m.com

5. All correspondence should be sent to:
   (specify one of the above) WALTER PELKY or CRAIG ROBINSON

6. Assessor's Tax Map Number: M9 Lot Number: 13 (of land to be divided)

7. Is applicant a Maine-licensed corporation? ☐ Yes ☒ No (if yes, attach copy of license)

8. What legal interest does the applicant have in the property to be developed (ownership, option, purchase & sales contract, etc.)?

OWNERSHIP AND OCCUPY

9. What interest does the applicant have in any abutting property?

none

10. Location of Property:
Street Address (approx.) 542 LINDSEY RD
Book 15836 Page 127 (From County Registry of Deeds)

11. Current Zoning and Shoreland Overlay of property: RA

12. Is any portion of the property within 250 feet of the high water mark of a pond, river or salt-water body? ☐ Yes ☒ No

13. Total Acreage: 6.042 Acreage to be developed: 6.042

14. Indicate the nature of any restrictive covenants to be place in the deeds:

none

15. Has this land been part of a prior approved subdivision? ☒ Yes ☐ No
Or other divisions within the past 5 Years? ☒ Yes ☒ No
If so, please describe and/or list the Map and Lot numbers of all 'out-sale' lots:

16. Identify existing use(s) of land, (farmland, woodlot, etc.)

Existing Duplex (lot 3)

17. Does the parcel include any water bodies? ☐ Yes ☒ No

18. Is any portion of the property within a special flood hazard area as idenitifed by the Federal Emergency Management Agency? ☐ Yes ☒ No

19. Number of lots or dwelling units exising: 2 and
Number of lots or dwelling units proposed: 6.

20. Does this development require extension of public infrastructure? ☐ Yes ☒ No
If yes, which type of structure?

☐ roads ☐ storm drainage ☐ sidewalks
☐ water lines ☐ fire protection equipment ☐ sewer
☐ If other, please state_____

21. Estimated cost for infrastructure improvements: $ N/A

22. Identify method of water supply to the proposed development:

☒ individual wells
☐ central well w/ distribution lines
☐ connection to public water system
☐ If other, please state alternative_____

23. Identify method of sewage disposal to the proposed development:

☒ individual septic tanks
☐ connection to public sewer system
☐ central on site disposal with distribution lines
☐ If other, please state alternative_____

24. Identify method of fire protection for the proposed development:

☒ hydrants connected to the public water system
☐ dry hydrants located on an existing pond or water body
☐ existing fire pond
☐ If other, please state alternative (for example, individual sprinklers)_____

25. Does the applicant intend to request waivers of any of the subdivision submission requirements? ☐ Yes ☒ No
If yes, list them and state the reasons for the request:

_____
_____
_____
_____

CERTIFICATION: To the best of my knowledge, all the information submitted on this subdivision plan and with my application is true and correct.

Signature of Applicant _____ Date 8/10/16

- Please contact the Planning Department at (207) 646-5187 regarding the number of copies of materials to be submitted, in what format, and for other questions and information.
- The entire Wells Town Code is on the town website www.wellstown.org . Please follow the link to the 'Document Center' and then the 'Town Code'. The subdivision ordinance is Chapter 202. Other relevant sections include the Land Use Ordinance (Chapter 145), the Streets and Sidewalks Ordinance (Chapter 201), and the Residential Growth Management Ordinance (Chapter 175).

THE APPLICANT MUST SUBMIT THE FOLLOWING MATERIALS AND INFORMATION TO THE PLANNING OFFICE WITH THE AMENDMENT FORM IN ORDER FOR THE SUBMISSION TO BE CONSIDERED.

- To be submitted with a subdivision amendment application form (*See §202-10)*

Submitted	Not Submitted	Subdivision Amendment form shall be accompanied by
		A copy of the approved plan, as well as 11 copies of the proposed revisions.
		Supporting information to allow the Board to make a determination that the proposed revisions meet the standards of chapter 202 standards and criteria
		A revised plan indicating that it is the revision of a previously approved and recorded plan and shall show the book and page or cabinet and sheet on which the original plan is recorded at the Registry of Deeds.
		Evidence that all owners of abutting property were notified of the application if new lots or dwelling units are proposed to be created

TOWN OF WELLS, MAINE

P.O. Box 398, Wells, Maine 04090
Phone: (207) 646-5187, Fax: (207) 646-2935
Website: www.wellstown.org

FINAL SUBDIVISION/ AMENDMENT APPLICATION COMPLETENESS REVIEW CHECKLIST

(This Checklist MUST be submitted)

Project Name: _____ **Applicant:** _____

Checklist Prepared By: _____ **Date:** _____
Checklist Reviewed By: _____ **Date:** _____

Please use this Checklist as a guide to prepare your Application. Check the appropriate blank boxes. Shaded boxes indicate the action in the heading cannot be taken. The Checklist does not substitute for the requirements for Subdivision Approval in Chapter 202 of the Subdivision of Land Ordinance.

		Response (Please check applicable box)			
Code Section	***I. General***	Submitted By Applicant	To Be Submitted By Applicant	Not Applicable	Applicant Requests Waiver
202-9A.1	An application for final approval has been submitted within 6 months after approval of the preliminary plan. The final plan approximates the layout shown on the preliminary plan.				
202-9A.6.a	Maine Department of Environmental Protection approval under the Site Location of Development Act and the Natural Resources of Protection Act				
202-9A.6.b	The KKWWD approval, if the district's water service is to be used				
202-9A.6.c	Maine Department of Human Services approval, if the subdivider proposes to provide a central water supply system.				
202-9A.6.d	The Wells Sanitary District approval, if the public sewage disposal system is to be used.				
202-9A.6.e	Maine Department of Human Services approval, if a centralized or shared subsurface sewage disposal system(s) is to be utilized.				
202-9A.6.f	An Army Corps of Engineers dredge and fill permit				
202-9A.6.g	NPDES permit for stormwater discharges				

Code Section	***II. Final Subdivision Submission Requirements***	Submitted By Applicant	To Be Submitted By Applicant	Not Applicable	Applicant Requests Waiver
202-9B.1	Proposed name of subdivision and the name of the municipality in which it is located, plus the Tax Assessor's map and lot numbers.				
202-9B.2	An actual field survey of the boundary lines of the tract, giving complete descriptive data by bearings and distances, made and certified by a licensed land surveyor. The corners of the tract shall be located on the ground and marked by monuments. The plan shall indicate the type of monument set or found at each corner.				
202-9B.3	The number of acres within the proposed subdivision, location of property lines, existing buildings, watercourses and other essential existing physical features.				
202-9B.4	Indication of type of sewage disposal to be used in the subdivision. A written statement from Wells Sanitary District must be submitted indicating approval of the subdivider's sewage design.				
202-9B.5.a	A written statement from KKWWD shall be submitted indicating that the district has reviewed and approval the water system design.				
202-9B.5.a	A written statement shall be submitted from the Fire Chief approving all hydrant locations or other fire protection measures deemed necessary.				
202-9B.5.b.1	When the subdivision is not served by KKWWD, evidence of adequate groundwater quality shall be required for proposed subdivisions in the vicinity of known sources of potential groundwater contamination. The results of primary inorganic water analysis performed upon a well on the parcel to be subdivided or from wells on adjacent parcels, between the parcel to be subdivided and the potential contamination, shall be submitted.				
202-9B.5.b.2	When a proposed subdivision is to be served by a private central water system or contains structures other than one- or two- family dwellings, evidence of adequate groundwater quantity shall be required.				
202-9B.6	The date the plan was prepared				
202-9B.6	North Point (Identified or Magnetic or True)				
202-9B.6	Graphic map scale				
202-9B.6	Names and addresses of the record owner, subdivider and individual or company who or which prepared the plan				
202-9B.7	The location of any zoning boundaries affecting the subdivision.				
202-9B.8	The location and size of existing and proposed sewers, water mains, culverts, and drainageways on or adjacent to the property to be subdivided.				

Code Section	***II. Final Subdivision Submission Requirements***	Submitted By Applicant	To Be Submitted By Applicant	Not Applicable	Applicant Requests Waiver
202-9B.9	The location, names and present widths of existing and proposed streets, highways, easements, building lines, parks and other open spaces on or adjacent to the subdivision.				
202-9B.9	Plan shall contain sufficient data to allow the location, bearing and length of every street line, lot line and boundary line to be readily determined and be reproduced upon the ground.				
202-9B.9	The length of all straight lines, the deflection of angle radii, length of curves and central angles of curves, tangent distances and tangent bearings for each street shall be included.				
202-9B.10	The width and location of any streets or public improvements shown upon the Official Map and the Comprehensive Plan, if any, within the subdivision.				
202-9B.11	All parcels of land proposed to be dedicated to public use and the conditions of such dedication.				
202-9B.11	Written offers of cession to the municipality of all public open spaces shown on the plan and copies of agreements or other documents showing the manner in which open spaces to be retained by the developer or lot owners are to be maintained shall be submitted				
202-9B.11	If land is to be offered to the municipality, written evidence that the municipal officers are satisfied with the legal sufficiency of the written offer of cession shall be included.				
202-9B.12	A list of construction items with cost estimates that will be completed by the developer prior to the sale of lots and, for subdivisions containing more than 20 lots				
202-9B.12 202-9B.12.a	A separate list of construction and maintenance items, with both capital and annual operating cost estimates that must be financed by the municipality or quasi-municipal districts. These lists shall include but not be limited to: schools, including busing; street maintenance and snow removal; police and fire protection; solid waste disposal; recreation facilities; stormwater drainage; wastewater treatment; and water supply.				
202-9B.12.b	The developer shall provide an estimate of the net increase in taxable assessed valuation at the completion of the construction of the subdivision.				
202-9B.13	If any portion of the subdivision is in a flood-prone area, the boundaries of any flood hazard areas and the one-hundred-year flood elevation shall be delineated on the plan.				

Code Section	***II. Final Subdivision Submission Requirements***	Submitted By Applicant	To Be Submitted By Applicant	Not Applicable	Applicant Requests Waiver
202-9B.14	A soil erosion and sedimentation control plan, prepared in accordance with the Maine Erosion and Sedimentation Control Handbook for Construction: Best Management Practices, published by the Maine Department of Environmental Protection and the Cumberland County Soil and Water Conservation District, 1991.				
202-9B.15	A stormwater management plan, prepared by a registered professional engineer in accordance with the most recent edition of Stormwater Management For Maine: BMPS Technical Design Manual, published by the Maine Department of Environmental Protection, 2006. Another methodology may be used if the applicant can demonstrate it is equally or more applicable to the site.				
202-9B.16	If any portion of the proposed subdivision is located in the direct watershed of Ell Pond or within 500 feet of the upland edge of Hobbs Pond and meets the following criteria: 1.) five or more lots or dwelling units created within any five-year period; or 2.) any combination of 800 linear feet of new or upgraded driveways and/or streets, then the following shall be submitted or indicated on the plan:				
202-9B.16.a	A phosphorus impact analysis and control plan conducted using the procedures set forth in MDEP Phosphorus Design Manual, Volume II of the Maine Stormwater Best Management Practices Manual, 2006. The analysis and control plan shall include all worksheets, engineering calculations, and construction specifications and diagrams for control measures, as required by the most recent edition of Stormwater Management For Maine: BMPS Technical Design Manual, published by the Maine Department of Environmental Protection, 2006				
202-9B.16.b	A long-term maintenance plan for all phosphorus control measures				
202-9B.16.c	The contour lines shown on the plan shall be at an interval of no less than five feet				
202-9B.16.d	Areas with sustained slopes greater than 25% covering more than one acre shall be delineated				

LISTING OF ABUTTERS TO A PROPOSED FINAL SUBDIVISION APPLICATION

Project Name: _____

Street Address of Project: _____

Map/ Lot # of Project: _____

Final Subdivision applications are to be accompanied by a current list of names and addresses of abutters to the proposed project. Abutter information shall be obtained by the applicant from the Town Tax Assessor's records. [*Abutter is defined as "A person who owns adjacent land or land across a street right-of-way from the subject lot"*]

It is the responsibility of the Planning Office to notify abutters of a **NEW** Final subdivision application.

It is the responsibility of the applicant to notify abutters of a Final Subdivision **AMENDMENT** application.

Names, Addresses, and Tax Map & Lot Numbers of Abutters to Proposed Project

Name	Address	Tax Map	Lot

PORE DONE BY PLANNING DEPARTMENT

I hereby certify that this is a current and accurate listing of all abutters to this proposed subdivision.

_____ 8/10/16

Signature of Applicant Date

Attach extra pages as necessary

TOWN OF WELLS, MAINE

P.O. Box 398, Wells, Maine 04090
Phone: (207) 646-5187, Fax: (207) 646-2935
Website: www.wellstown.org

FINAL SUBDIVISION AMENDMENT APPLICATION ABUTTER NOTIFICATION

*This Final Subdivision Amendment Application Notice to abutters is required to be **mailed by the applicant** to all abutters and to the Wells Planning Department at P.O. Box 398, Wells, ME 04090 per §202-6.*

To Whom It May Concern:

A property owner adjacent to or across the street from your property has filed a Final Subdivision Amendment Application with the Town of Wells Planning Office. The Subdivision Application and proposed plans are currently available for public inspection at the Wells Planning Office. This abutter notification is required by the Wells Subdivision of Land Ordinance for all subdivision pre-applications and if new lots or dwellings units would be created through a subdivision amendment.

Planning Board meetings are open to the public for informational purposes. Only Planning Board PUBLIC HEARINGS, of which abutters are mailed certified mail notice, give the opportunity to concerned abutters/Wells residents to speak at a scheduled meeting about this application. Please feel free to mail or email your concerns in writing to the attention of the Planning Office at the address noted above. Copies of the written concerns will be provided to the Planning Board at a scheduled meeting.

For dates and times when this application will be discussed at a scheduled meeting, please call the Planning Office at (207) 646-5187 or visit www.wellstown.org and click on the 'Meeting Calendar' to view the upcoming meeting agendas. "An aggrieved party may appeal any decision of the Board under [the regulations of chapter 202] to York County Superior Court." §202-15

Property Owner (of land to be divided): _____

Owner's Mailing Address: _____

Applicant's Name: _____

Applicant's Mailing Address: _____

Applicant's Signature: _____

Assessor's Tax Map Number: _____ **Lot Number :**_____ **(of land to be divided)**

Subdivision Location (street address):_____

Acres to be subdivided: _____ **Number of proposed lots or dwelling units:** _____

Zoning District(s): _____

Description of Proposal: _____

_____

Assessors Office, Town of Wells

P.O. Box 398, Wells ME 04090-0398
(207) 646-6081, Fax: (207) 646-2935

ROAD NAME REQUEST FORM

In order to comply with the Enhanced E911 requirement that street names be as clear and distrinct as possible for emergency dispath, it is necessary to have new street names approved by the E911 Coordinator prior to subdivision approval. Extra steps and charges may be eliminated during the approval process if the street names don't have to be changed mid-stream.

Please use on form for each street under consideration, and allow a few days for this process. List at lease three names to be considered. They should not look like or sound like existing street names. For the present time, the list of street names (actual and reserved) are availabel in the Assessor's Office. In the near future, we will have a list on our website for your convenience. www.wellstown.org

NAME OF PROPOSED SUBDIVISION: _____

LOCATION OF PROPOSED SUBDIVISION : _____

MAP(s)/LOT(s)#: _____

Desired Road Names to be Considered:

1. _____
2. _____
3. _____
4. _____
5. _____

Contatct Name of Development: _____

Contact Phone: _____ Email: _____

Office Use Only

STREET NAME APPROVED: _____

Date: _____ Signature: _____
Keeley Lambert, E911 Coordinator

LEGEND

SYMBOL	DESCRIPTION
IRF/IPF	IRON ROD/IRON PIPE FOUND
	UTILITY POLE
GMF/SMF	GRANITE/STONE MONUMENT FOUND
	5/8" IRON ROD W/ CAP TO BE SET
GMS	GRANITE MONUMENT OR DRILL HOLE AS CONDTIONS PERMIT
CB	CATCH BASIN
	EDGE OF PAVEMENT
95	EXISTING CONTOUR
N/F	NOW OR FORMERLY
R/P	SEPTIC SYSTEM
	NITRATE PLUME
	EXISTING STONEWALL
	PROPERTY LINE
	TREES 24" OR GREATER
	TREES TO BE REPLANTED

LINE/CURVE DATA

L1 - N39°39'32"E 47.20'
C1 - R=6511.67', L=42.98'
L2 - L=83.62'
L3 - L=175.00'

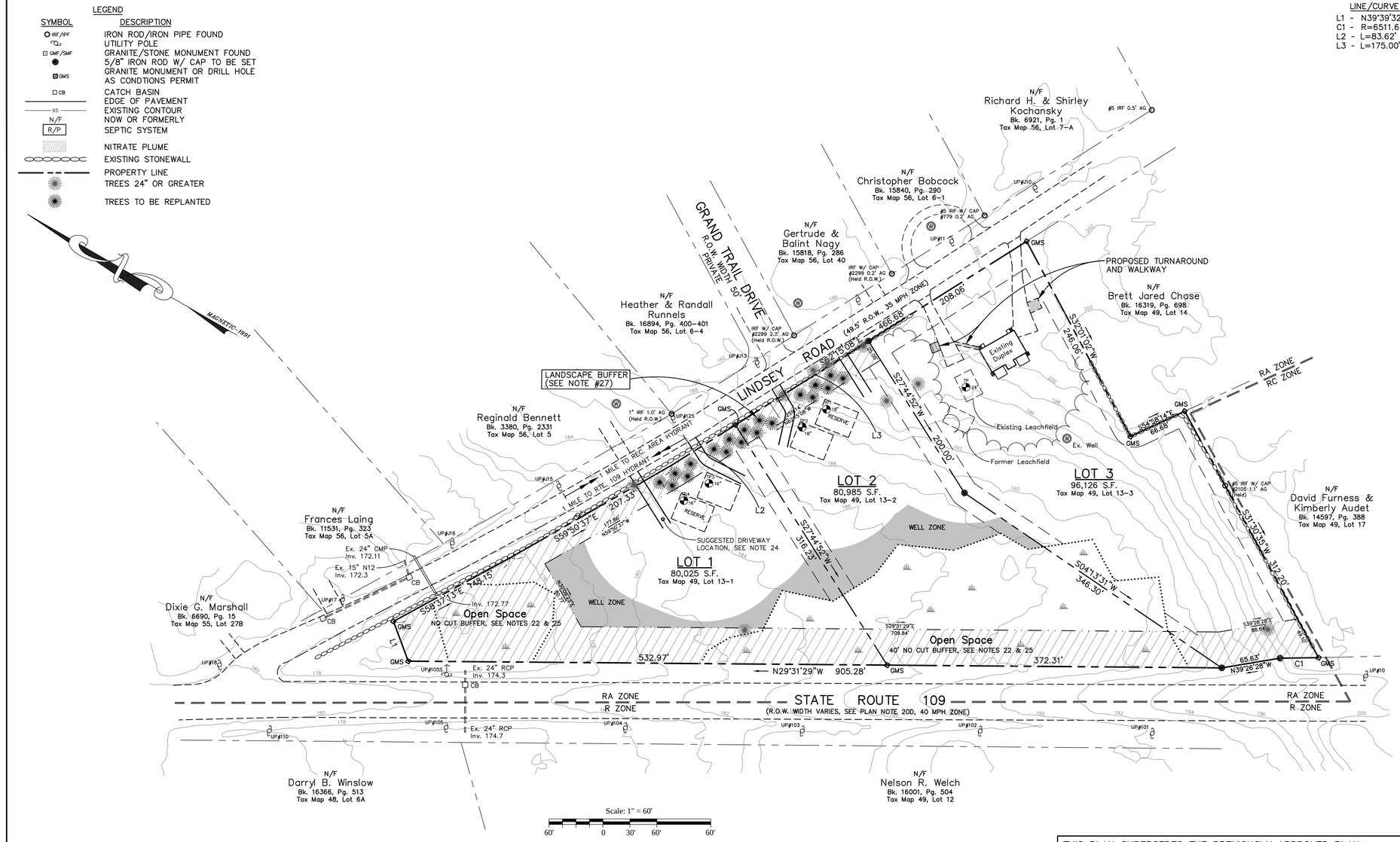

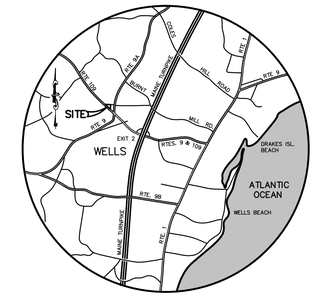

LOCATION MAP

SCALE: 1" = 2 MILES

NOTES:

1. OWNER/APPLICANT: CRAIG B. ROBINSON
542A LINDSEY ROAD
WELLS, MAINE 04090

2. ENGINEER: STEVE BLAKE PE# 11695
BH2M
28 STATE STREET
GORHAM, MAINE

3. SURVEYOR: ROBERT C. LIBBY JR., PLS #2190
BH2M

4. WETLANDS & SOILS: MARK HAMPTON, C.S.S. #216, L.C.E. #263
MARK HAMPTON ASSOCIATES
PORTLAND, MAINE

5. DEED REFERENCE: BK. 15836, PG. 127

6. TAX MAP REFERENCE: MAP 49, LOT 13

7. ZONING: RESIDENTIAL A (RA)

8. PROPOSED USE: THREE LOTS WITH TWO SINGLE FAMILY UNITS OR ONE TWO-FAMILY UNIT (DUPLEX) ON EACH LOT

9. TOTAL LOT AREA: 6.042 ACRES

10. DIMENSIONAL REQUIREMENTS: RESIDENTIAL A (RA) ZONE
MIN-LOT SIZE - 40,000 S.F. (SEPTIC) NET AREA
MIN. STREET FRONTAGE - 125' (SEPTIC)
MAX DENSITY PER DWELLING UNIT - 40,000 (SEPTIC)
SETBACKS - 15' FROM ANY LOT LINE
25' FROM STREET R.O.W.
40' FROM STATE HIGHWAY
PER 145-350 SETBACK FROM LINDSEY RD. CAN BE REDUCED TO 15' FOR LOTS 1 & 2
MAX. LOT COVERAGE - 40% OR 2,000 S.F. (WHICHEVER GREATER)
MAX. BUILDING HEIGHT - 30', NOT TO EXCEED 3 STORIES

11. SEWER SERVICE: ON SITE INDIVIDUAL SUBSURFACE SYSTEMS FOR TWO 2 BEDROOM UNITS. LOCATIONS MAY VARY UP TO 10' WITH CODE ENFORCEMENT OFFICER APPROVAL.

12. WATER SERVICE: DRILLED WELLS, DUG WELLS PROHIBITED, RESTRICTIONS TO BE NOTED IN DEEDS. ALL WELLS SHALL BE LOCATED IN THE WELL ZONE AND A MINIMUM OF 100' FROM ANY SEPTIC SYSTEM.

13. ELECTRIC/TELEPHONE/CABLE: OVERHEAD FROM EXISTING POLES

14. ANY DRIVEWAY THAT EXCEEDS 150' IN LENGTH SHALL REQUIRE A 60' X 25' TURNAROUND PER THE WELLS FIRE CHIEF. DRIVEWAYS LESS THEN 150' SHALL HAVE AN ON SITE VEHICLE TURNAROUND. NO BACKING ONTO LINDSEY ROAD SHALL BE ALLOWED.

15. ALL CONSTRUCTION AND SITE ALTERATION SHALL BE DONE IN ACCORDANCE WITH THE MAINE EROSION AND SEDIMENTATION CONTROL BMP'S, LATEST REVISION.

16. STORMWATER MANAGEMENT FOR LOTS 1, 2, AND 3 WILL BE ADDRESSED BY ONE OF FOLLOWING METHODS AT THE TIME OF BUILDING PERMIT APPLICATION:

A. COLLECTION OF ROOF RUNOFF INTO RAIN GUTTERS AND DIRECT STORMWATER TO AN INFILTRATION SYSTEM (MDEP LID).

B. ROOF RUNOFF TO FLOW INTO A STONE PERIMETER INFILTRATION TRENCH (MDEP LID).

17. AREAS DESIGNATED AS "RESERVE" AREAS FOR SEPTIC SHALL NOT BE BUILT UPON. THESE AREAS SHALL ADHERE TO BUILDING SETBACK REQUIREMENTS.

18. NO FLOOD ZONE IS PRESENT ON THE PARCEL PER FEMA MAP 23015800013D

19. TOPOGRAPHY: STATE OF MAINE, MAINE OFFICE OF GIS, TOWN OF WELLS 2' CONTOUR MAP

20. MONUMENTATION OF LOTS 1,2 AND 3 SHALL BE INSTALLED PRIOR TO CONVEYANCE OF ANY LOT OR ANY BUILDING PERMIT BEING ISSUED.

21. ALL LOTS SHALL BE ACCESSED FROM LINDSEY ROAD.

22. AREA MARKED "NO CUT BUFFER" (61,178 S.F.) SHALL REMAIN IN IT'S NATURAL STATE EXCEPT FOR REMOVAL OF DEAD OR DISEASED TREES. CUTTING FOR DRIVEWAY LOCATIONS FOR LOTS 1 AND 2 SHALL BE RESTRICTED TO AN AREA 24' WIDE. CLEARING TO BE ALLOWED FOR OVERHEAD ELECTRIC LINES.

23. SUGGESTED DRIVEWAY LOCATIONS FOR LOTS 1 AND 2 ARE APPROXIMATE AND MAY VARY DUE TO CURRENT CONDITIONS AT TIME OF CONSTRUCTION 10' LEFT OR RIGHT.

24. DRIVEWAY CULVERT REQUIREMENTS SHALL BE DETERMINED AT TIME OF ISSUANCE OF DRIVEWAY STEET OPENING PERMIT BY TOWN OF WELLS ROAD COMMISSIONER.

25. OPEN SPACE: REQUIRED - 10% OR 26,318 S.F.
PROPOSED - 23% OR 61,178 S.F.

NO STRUCTURES OR LOT COVERAGE IS ALLOWED WITH THE EXCEPTION OF DRIVEWAY ACCESS (SEE NOTES 22 AND 23). OPEN SPACE MANAGEMENT AND MAINTENCANCE SHALL BE THAT OF THE INDIVIDUAL LOT OWNERS FOR AREAS LOCATED ON THE INDIVIDUAL LOTS. OWNERS OF LOTS 1 THRU 3 SHALL HAVE PASSIVE RECREATIONAL USE OF ALL OPEN SPACE WITHIN THE SUBDIVISION.

26. WAIVERS GRANTED: 202-8.B(2)(t) - HYDROGEOLOGIC ASSESSMENT NOT REQUIRED.
202-12.E - UNDERGROUND UTILITIES NOT REQUIRED.
202-12.F(4) - STORMWATER MANAGEMENT PLAN..

27. RE-VEGATATE: WHITE PINES 6-8' TALL, 2 ROWS @ 10' O.C. STAGGERED.

THIS PLAN SUPERSEDES THE PREVIOUSLY APPROVED PLAN TITLED "FINAL PLAN ROBINSON COMMONS", LINDSEY ROAD, WELLS MAINE. PREPARED BY BH2M ENGINEERS APPROVED NOVEMBER 2015, AND RECORDED IN THE YORK COUNTY REGISTRY OF DEEDS PLAN BOOK 379, PAGE 25. THIS AMENDMENT IS TO ADD A LANDSCAPE BUFFER ALONG LINDSEY ROAD IN FRONT OF LOTS 1 AND 2. THIS BUFFER IS REQUIRED BECAUSE THE APPLICANT CUT WITHIN THE NO CUT BUFFER AREAS APPROVED ON THESE LOTS. THE PROPOSED BUFFERS WILL REPLACE THE TREES REMOVED. PLEASE NOTE THAT THE DRIVEWAY LOCATIONS HAVE BEEN ALTERED AS WELL.

STANDARD CONDITIONS OF APPROVAL

1. ANY SUBDIVISION NOT RECORDED IN THE REGISTRY OF DEEDS WITHIN 90 DAYS OF THE DATE UPON WHICH THE PLAN IS APPROVED AND SIGNED BY THE BOARD SHALL BECOME NULL AND VOID, UNLESS AN EXTENSION IS GRANTED BY THE BOARD IN WRITING BEFORE THE EXPIRATION OF THE NINETY-DAY PERIOD. (§ 202-9C(2)).

2. PRIOR TO THE ISSUANCE OF A BUILDING PERMIT FOR A PRINCIPAL STRUCTURE IN THE SUBDIVISION, THE APPLICANT SHALL PRESENT EVIDENCE OF SUITABLE WATER SUPPLY TO THE CODE ENFORCEMENT OFFICER. THE EVIDENCE SHALL CONSIST OF THE RESULTS OF A PRIMARY INORGANIC WATER ANALYSIS PERFORMED UPON THE WELL TO SERVE THE STRUCTURE, INDICATING THE GROUNDWATER MEETS THE PRIMARY DRINKING WATER STANDARD OF THE MAINE RULES RELATING TO DRINKING WATER FOR THOSE CATEGORIES TESTED. (§ 202-12F(2)(b)[4])

3. PRIOR TO ISSUANCE OF A BUILDING PERMIT IN ANY APPROVED SUBDIVISION, THE SUBDIVIDER SHALL PROVIDE THE CODE ENFORCEMENT OFFICER WITH A LETTER FROM A REGISTERED LAND SURVEYOR STATING THAT ALL MONUMENTATION SHOWN ON THE PLAN FOR THE LOT RECEIVING THE BUILDING PERMMIT AND FOR THE APPROVED SUBDIVISION PERIMETER BOUNDARIES OR PHASE THERIN AS APPROVED BY THE PLANNING BOARD HAS BEEN INSTALLED. (§ 202-11A(5))

4. NO CHANGES, ERASURES, MODIFICATIONS OR REVISIONS SHALL BE MADE IN ANY FINAL PLAN AFTER APPROVAL HAS BEEN GIVEN BY THE PLANNING BOARD AND ENDORSED IN WRITING ON THE PLAN, UNLESS THE REVISED FINAL PLAN IS FIRST SUBMITTED AND THE BOARD APPROVES ANY MODIFICATIONS, EXCEPT IN ACCORDANCE WITH § 202-10A(3). (§ 202-9C(4))

5. THE APPROVAL BY THE BOARD OF A SUBDIVISION PLAN SHALL NOT BE DEEMED TO CONSTITUTE OR BE EVIDENCE OF ANY ACCEPTANCE BY THE MUNICIPALITY OF ANY STREET, EASEMENT OR OTHER AREA SHOWN ON SUCH PLAN. (§ 202-9C(5))

6. FAILURE TO COMMENCE SUBSTANTIAL CONSTRUCTION OF THE SUBDIVISION WITHIN FIVE YEARS OF THE DATE OF APPROVAL AND SIGNING OF THE PLAN SHALL RENDER THE PLAN NULL AND VOID. (§ 202-9C(6)

DATED AT WELLS, MAINE THIS ____ DAY OF _____, 2015

WELLS PLANNING BOARD

BY: _____
CHARLES MILLIAN, CHAIRMAN

YORK COUNTY REGISTRY OF DEEDS

RECEIVED _____ AT _____H _____M _____M

AND RECORDED IN BOOK _____ PAGE _____

ATTEST _____
REGISTRAR

PLAN REFERENCES:

A. PLAN OF LAND TO BE CONVEYED BY DANIEL CHASE FAMILY REAL ESTATE TRUST TO RUSSELL & ALYSON CHASE, LAND LOCATED NORTH OF LINDSEY ROAD, WELLS, MAINE, DATED 1/28/08 BY POST ROAD SURVEYING.

B. AMENDED FINAL PLAN, ELSIE ELIZABETH ESTATES, BRANCH AND LINDSEY ROADS, WELLS, MAINE FOR THE DANIEL CHASE FAMILY REAL ESTATE TRUST, DATED AUG. 2012, BY BH2M AND RECORDED IN THE Y.C.R.D. PLAN BOOK 364, PAGE 48.

C. PROPERTY SURVEY FOR INGER L. ATKINS, WELLS, MAINE, DATED 7/83 BY CHARLES E. LAWSON, PLS#147 AND RECORDED IN THE Y.C.R.D. IN PLAN BOOK 125, PAGE 37.

D. SURVEY OF LAND OF RONALD AND SARLEY CHASE, WELLS, MAINE, DATED JULY 20, 1975, BY JOHN ROSSBOROUGH, PLS#231 AND RECORDED IN THE Y.C.R.D. IN PLAN BOOK 76, PAGE 2.

E. STATE OF MAINE DEPARTMENT OF TRANSPORTATION RIGHT OF WAY MAP, WELLS, YORK COUNTY, DATED APRIL 2010, D.O.T. FILE NO. 16-427 SHEETS 8, 9, 10 & 11.

THIS PLAN REVIEWED AND APPROVED BY THE TOWN OF WELLS PLANNING BOARD.

_____
DATE

I CERTIFY THAT THIS SURVEY CONFORMS TO THE MAINE BOARD OF LICENSURE FOR PROFESSIONAL LAND SURVEYORS TECHNICAL STANDARDS OF PRACTICE FOR A STANDARD BOUNDARY SURVEY WITH THE FOLLOWING EXCEPTIONS:

1. NO SURVEYORS REPORT

STATE OF MAINE ROBERT C. LIBBY JR. 2190 PROFESSIONAL LAND SURVEYOR

ROBERT C. LIBBY JR. PLS #2190

NO.	DATE	REVISION DESCRIPTION
*	8/17/16	Amended Plan

STATE OF MAINE STEVE BLAKE 11695 PROFESSIONAL ENGINEER

BH2M
Berry, Huff, McDonald, Milligan Inc.
Engineers, Surveyors
28 State Street
Gorham, Maine 04038
Tel. (207) 839-2771
Fax (207) 839-8250

FOR
Craig B. Robinson
542A Lindsey Road
Wells, Maine

AMENDED FINAL PLAN
ROBINSON COMMONS
LINDSEY ROAD
WELLS, MAINE

DESIGNED	DATE
W. Pelkey	Sept. 2015
DRAWN	SCALE
Dept.	As Noted
CHECKED	JOB. NO.
R. Libby Jr.	15102-AM

SHEET
1

REPRODUCTION OR REUSE OF THIS DOCUMENT WITHOUT THE EXPRESSED WRITTEN CONSENT OF BH2M INC. IS PROHIBITED

G:\2015\15102-MA\Site Plan.dwg, 8/17/2016 5:42:02 PM, DWG to PDF.pc5

Planning & Development
208 Sanford Road, Wells, Maine 04090
Phone: (207) 646-5187, Fax: (207) 646-7046
Website: www.wellstown.org

Michael G. Livingston, Town Engineer/Planner	*mlivingston@wellstown.org*
Shannon M. L. Belanger, Planning Assistant	*sbelanger@wellstown.org*

Major Subdivision Application Memo

Date: August 18, 2016

To: Planning Board

From: Planning Office

Re: Wire Road Subdivision - Map 75, Lot 1

Project Description:

Attar Engineering has submitted a Final Subdivision Application for a 40 lot/ 40 single family dwelling unit Residential Cluster Development (major subdivision) on behalf of the property owner Highpine Properties, LLC. The property is located off of Wire Road and is identified as Tax Map 75, Lot 1 and is located within the Rural District. The property is 100.26 acres in size and 73.73 acres is proposed as dedicated Open Space. The subdivision proposes private street right-of-ways, common on-site septic systems, and individual on-site drilled wells.

§ 202-9. Final plan for major subdivision.

A. Procedure.

(1) The subdivider shall, within six months after the approval of the preliminary plan, file with the Board an application for approval of the final plan at least 10 days prior to a scheduled meeting of the Board. If the application for the final plan is not submitted within six months after preliminary plan approval, the Board may refuse without prejudice to act on the final plan and require resubmission of the preliminary plan. The final plan shall approximate the layout shown on the preliminary plan, plus any recommendations made by the Board. **[Amended 7-11-1996]** **Prelim. Approval granted 3/21/16. Final App submitted on 5/24/16.**

(2) If a public hearing is deemed necessary by the Board, an additional fee in the amount established by the Board of Selectmen following notice and a public hearing shall be required to cover the costs of advertising and postal notification. **[Amended 7-9-2002; 4-16-2004]** **Held 6/20/16**

(3) The subdivider, or his duly authorized representative, shall attend the meeting of the Board to discuss the final plan. **Yes**

(4) When the application is received by the Planning Board, it shall give the applicant a dated receipt acknowledging that it has received the application. **Final Application received 6/6/16**

(5) Within 30 days after receiving any application, the Board shall notify the applicant in writing either that the application is complete or, if it is incomplete, the specific additional material

needed to complete the application. The Board shall determine whether to hold a public hearing on the final plan application. **Final Public Hearing held on 6/20/16**

(6) Prior to submittal of the final plan application, the following approvals shall be obtained in writing, where appropriate:

(a) Maine Department of Environmental Protection, under the Site Location of Development Act and the Natural Resources Protection Act. Editor's Note: See 38 M.R.S.A § 481 et seq. and 38 M.R.S.A. § 480-A et seq., respectively. **DEP Permit approval granted Aug 2016**

(b) The Kennebunk, Kennebunkport and Wells Water District, if the district's water service is to be used. **Not Applicable**

(c) Maine Department of Human Services, if the subdivider proposes to provide a central water supply system. **Not Applicable. Water supply by individual private wells.**

(d) The Wells Sanitary District, if the public sewage disposal system is to be used. **Not Applicable, no existing sewer mains within 1,000 feet of the property**

(e) Maine Department of Human Services, if a centralized or shared subsurface sewage disposal system(s) is to be utilized. **Written approval received from DHHS dated 5-16-16**

(f) An Army Corps of Engineers dredge and fill permit. **Not Applicable, no wetland fill proposed.**

(g) NPDES permit for stormwater discharges. **Not Applicable, included in MDEP Site Location Permit.**

(7) A public hearing may be held by the Planning Board within 30 days after the issuance of a receipt for the submittal of a complete application. This hearing shall be advertised in a newspaper of local circulation at least two times, the date of the first publication to be at least seven days before the hearing, and the notice of the hearing shall be posted in at least three prominent places at least seven days prior to the hearing. When a subdivision is located within 500 feet of a municipal boundary and a public hearing is to be held, the Planning Board shall notify the Clerk and the Planning Board of the adjacent municipality involved at least 10 days prior to the hearing. **Public Hearing on 6/20/16**

(8) Upon receipt of an application for a subdivision containing 20 lots or dwelling units or more, the Planning Board shall notify the Road Commissioner, School Superintendent, Police Chief and Fire Chief of the proposed subdivision, the number of dwelling units proposed, the length of roadways and the size and construction characteristics of any multifamily, commercial or industrial buildings. The Planning Board shall request that these officials comment upon the adequacy of their department's existing capital facilities to service the proposed subdivision.

(9) Before the Board grants approval of the final plan, the subdivider shall meet the performance guaranty requirements contained in § 202-13. **To be determined**

(10) The Board, within 30 days from the public hearing or within 60 days of the official submittal date if no hearing is held, shall make findings of fact and conclusions relative to the standards contained in 30-A M.R.S.A. § 4404, Subsection 3 and in these regulations. If the Board finds that all standards of the statute and these regulations have been met, it shall approve the final plan. If the Board finds that any of the standards of the statute and these regulations have not been met, the Board shall either deny the application or approve the application with conditions to ensure all of the standards will be met by the subdivision. The reasons for any denial or conditions shall be stated in the records of the Board. **To be determined**

B. Submissions. The final plan shall consist of one or more maps or drawings drawn to a scale of not more than 100 feet to the inch. Plans for subdivisions containing more than 75 acres may be drawn at a scale of not more than 200 feet to the inch. Plans shall be no larger than 24 inches by 36 inches in size and

shall have a margin of two inches outside of the border line on the left side for binding and a one-inch margin outside the border along the remaining sides. Space shall be reserved thereon for endorsement by the Board. One reproducible, stable-based transparent original and three copies of the plan shall be submitted. In addition, the applicant shall submit 11 copies of the final plan, reduced to a size of 11 inches by 17 inches, and all accompanying information to the Office of Planning and Development no less than 10 days prior to the meeting. The application for approval of the final plan shall include the following information:

Recommendations and conclusions:

1. The Planning Board should workshop the following Final completeness (202-9) and draft compliance (202-12) items:
    a. Revised HOA Declaration prepared by Joseph Carlton provided 8-18-2016. Town Engineer review of revisions prepared 8-19-16. Comments include:
        i. Are any Open Space areas to be dedicated to a conservation group via easement? Plan Note 24 to be added?
        ii. A Sample deeds to address Town Engineer review comments
        iii. A special condition of approval has been recommended that the final documents addressing the Town Engineer comments be provided prior to the scheduling of a pre-construction meeting.
    b. Minor recommended plan changes and note changes/additions to be addressed by the applicant
        i. Plan note 22 repeated, plan renumbering needed
        ii. Plan to note individual septic tanks to be installed on each lot
        iii. Foundation drains for lots along Wire Road/ Camerons Way to be addressed
        iv. Driveway culvert detail needed on sheet 5.1
    c. Planning Board to consider voting to allow 40% lot coverage for the cluster lots as all are less than 40,000 SF in size, per 145-49C5.
    d. Site Location Permit approval from MDEP granted Aug 2016 was received and has been noted on the subdivision plan.
    e. A construction cost estimate to include Monumentation and Fencing installation costs has been provided.
2. If the above items are addressed or found acceptable the Planning Board should consider finding the application compliant (202-12).
3. If compliant, the Planning Board should consider voting to approve and sign the Findings of Fact & Decisions and subdivision plan.

Project Name/District:	Wire Road Subdivision - Rural District - Tax Map 75, Lot 1	Date of Review:	1/21/16; 02/19/16; 08/18/16
Prepared By:	Office of Planning & Development	Company Name:	Town of Wells

Article VII
Performance Standards

§ 145-49. Residential Cluster Development. [Amended 11-7-2006] [Amended 06-14-2016]			Application Meet Requirements			
			Yes	No	NA	Comments
The purpose of this section is to allow, by Planning Board approval, the clustering of one- and two-family dwelling units. Clustering shall provide a more efficient use of land resulting in the preservation of natural land forms, wetlands, wildlife and waterfowl habitats, significant vegetation and agricultural lands, other natural resources, and historic sites. Notwithstanding other provisions of this chapter, the Planning Board may modify the dimensional requirements of this chapter as specified in this section to permit the clustering of one- and two-family homes. Such modifications shall not be construed as the granting of a variance to relieve hardship.						
A.	Permitted locations. Residential cluster development shall be permitted in all zoning districts where residential development is allowed. All areas of a cluster subdivision located within the Aquifer Protection District or the Shoreland Overlay District shall be dedicated as undeveloped open space. **[Amended 06-14-2016]**		**Y**			The subdivision is located within the Rural District. No AP or Shoreland Overlay zones present.
B.	Density. The maximum density of dwelling units permitted shall be the same as permitted in the district(s) in which the cluster development is located, unless density bonuses are granted in accordance with § 145-49D. To determine maximum density the following steps shall be taken: **[Amended 06-14-2016]**		**Y**			See note 3 on sheet 1.1. A standard non-clustered subdivision layout was provided on 10/16/15.
	(1)	In order to determine the maximum number of dwelling units permitted on a tract of land the net residential acreage shall be determined by calculating net area and subtracting 15% of the area of the lot to account for roads and parking.	**Y**			See note 3 on sheet 1.1. Residential Cluster Development requires a 15% deduction from 100.26 which leaves a total of 85.22 acres. 85.22 x 43560 = 3,712,183 SF / 100,000 = 37 dwelling units.
	(2)	A cluster development layout shall be submitted indicating a minimum of 35% open space and significant natural features.	**Y**			The applicant proposes 73.73 acres to be dedicated Open Space or 73% Open Space. See note 4 on sheet 1.1.
C.	Dimensional requirements.					

Project Name/District: Wire Road Subdivision - Rural District - Tax Map 75, Lot 1 | Date of Review: 1/21/16; 02/19/16; 08/18/16

Prepared By: Office of Planning & Development | Company Name: Town of Wells

§ 145-49. Residential Cluster Development. [Amended 11-7-2006] [Amended 06-14-2016]			**Application Meet Requirements**			
			Yes	**No**	**NA**	**Comments**
	(1)	The minimum lot sizes may be reduced to 20,000 square feet in any district where clustering is allowed, if not serviced by public sewer, or may be reduced to the following if on public sewer: **Served by Public Sewer** **Type of Dwelling** / **RA, GB and RC Districts (square feet)** One-family Dwelling: 10,000 Two-family Dwelling: 15,000	**Y**			All lots may be reduced to 20,000 SF and are not served by public sewer.
	(2)	The required setbacks from lot lines and from street rights-of-way within the cluster development may be reduced, but no structure shall be located within 15 feet of any lot line or within 20 feet of any street right-of-way within the cluster development.	**Y**			See note 3 on sheet 1.1. 25' feet is required for all lots from Wire Road. Per 145-49 Residential Cluster lots may have a 20' setback from subdivision ROWs and 15' lot line setbacks. The Planning Board approved the reduction of setbacks on 3/21/16.
	(3)	The required street frontage may be reduced to no less than 50 feet.	**Y**			See note 3 on sheet 1.1. Proposed lots all appear to have 80' or more of street frontage. The Planning Board approved the reduction of street frontage for the cluster lots on 3/21/16.

Project Name/District: Wire Road Subdivision - Rural District - Tax Map 75, Lot 1 | Date of Review: 1/21/16; 02/19/16; 08/18/16

Prepared By: Office of Planning & Development | Company Name: Town of Wells

§ 145-49. Residential Cluster Development. [Amended 11-7-2006] [Amended 06-14-2016]			**Application Meet Requirements**			
			Yes	**No**	**NA**	**Comments**
	(4)	When a lot in a cluster subdivision abuts a nonclustered residential lot, the setback in the cluster subdivision lot shall be twice the required setback along the adjoining lot line. The Planning Board may require additional screening or restrict the removal of vegetation within the setback to provide a buffer between higher and lower density development.	**Y**			25' x 2 = 50' setback/ buffer required for all non-clustered residential abutters. This 50' setback is shown on the subdivision plans. Trees greater than 24" in diameter at breast height that exist are identified on sheets 1.3, 2.1 and 2.2. See note 22 on sheet 1.1. Lots 1A-6 and 1A-5 shall maintain trees noted to be 24" in diameter. A 50' no-cut buffer with a 120 liner foot 8' tall solid stockade (wood or vinyl) fence is proposed for M 75, L 1-2. On 7/25/16 the Planning Board found the 8' tall solid screening (fence) and 50' wide no-cut buffer acceptable and required the fence to be installed 5' from the abutting property line. A 25' no-cut buffer is proposed for M 68, Lot 2-A; the Planning Board found the 25' no cut buffer is sufficient on 7/25/16. Sheet 1.4 depicts the parcel lot line and the 50' buffer adjacent to proposed cluster lot 1A-34. A 50' no-cut buffer is required for this lot as well.
	(5)	The maximum lot coverage of 20% in the Rural District may be allowed by the Planning Board to be increased to 40% on lots smaller than 40,000 square feet in area. **[Added 06-14-2016]**				See notes 2, 3, and 4 on sheet 1.1. Maximum lot coverage of each lot is 40% as permitted by 145-49C5. **Planning Board to consider voting to allow 40% lot coverage for the cluster lots as all are less than 40,000 SF in size, per 145-49.C.5**.

Project Name/District: Wire Road Subdivision - Rural District - Tax Map 75, Lot 1 | Date of Review: 1/21/16; 02/19/16; 08/18/16

Prepared By: Office of Planning & Development | Company Name: Town of Wells

§ 145-49. Residential Cluster Development. [Amended 11-7-2006] [Amended 06-14-2016]			**Application Meet Requirements**			
			Yes	**No**	**NA**	**Comments**
D.	Innovative open space bonus. At least 35% of the total parcel acreage in a cluster subdivision must be designated as open space and protected as such in perpetuity. At the discretion of the Planning Board the applicant may earn density bonuses in addition to the maximum density permitted in § 145-49B. The applicant may seek application of more than one density bonus as set forth below, and the total density bonus earned shall be cumulative. However, in no case shall the total density bonus allow the overall subdivision density to exceed the maximum density allowed in § 145-49B above by more than 25% in the rural areas and 50% in the growth areas as set forth in the Comprehensive Plan. Bonuses shall be allotted in whole lot increments only and shall not be rounded up. Density calculations, including all awarded open space bonuses, shall be shown on the subdivision plan.		**Y**			An innovative Open Space Bonus is requested. On 2/22/16 the Planning Board granted a 10% density bonus.
	(1)	An open space cluster plan that provides at least 50% of the total parcel acreage as open space, protected as such in perpetuity, may be awarded a density bonus of 10%. The purposes for which proposed open space areas will be used shall be fully documented by the applicant.	**Y**			The applicant proposes 73.73 acres to be dedicated Open Space or 73% Open Space. A 10% density bonus was requested. A 10% density bonus was granted by the Planning Board on 2/22/16 for providing 73% Open Space. See note 4 on sheet 1.1.
	(2)	An open space cluster plan that protects agriculturally valuable lands and provides for their use as such in perpetuity may be awarded a 5% density bonus. The open space land preserved for agricultural use must consist of at least 3.5 acres, and be land that has been historically farmed, or contain good soils for farming, and be reasonably accessible to receive a bonus. The instrument designating the land as agriculture use, acceptable to the Planning Board, may reasonably restrict the type or intensity of farming to occur to prevent nuisances. This provision only requires that permission be reasonably available so that validity of the bonus is not affected if agricultural uses are not pursued at any particular time.			**NA**	

Project Name/District: Wire Road Subdivision - Rural District - Tax Map 75, Lot 1 | Date of Review: 1/21/16; 02/19/16; 08/18/16

Prepared By: Office of Planning & Development | Company Name: Town of Wells

§ 145-49. Residential Cluster Development. [Amended 11-7-2006] [Amended 06-14-2016]			**Application Meet Requirements**			
			Yes	**No**	**NA**	**Comments**
	(3)	An open space cluster plan that protects timber harvesting lands and provides permission for that use to continue in perpetuity may be awarded a 5% density bonus. The open space preserved for timber harvesting must include at least 10 contiguous acres and be land that has historically been forested, and must be reasonably accessible to receive a bonus. A forest management plan signed by a professional forester outlining proposed activities to ensure compliance with performance standards and regeneration requirements established pursuant to Title 12 M.R.S.A § 8869 must be submitted.			**NA**	
	(4)	An open space cluster plan that accomplishes either of the following:			**NA**	
		(a) Protects valuable wildlife and environmental areas in a manner that is consistent with the goals, policies and strategies of the following chapters and related maps in the Comprehensive Plan may be awarded a density bonus of 5%.				
		[1] Chapter 3, Natural Resources Policies and Strategies;				
		[2] Chapter 4, Marine Resources Policies and Strategies;				
		[3] Map 4, Natural Areas Wildlife Habitat;				
		[4] Map 9, Wetlands; or				
		[5] Map 10, Areas of High Potential for Wildlife Habitat.				
		(b) Links dedicated open space to large parcels of adjoining dedicated open space to provide usable wildlife habitat or corridor connections between usable wildlife habitats in a manner that is consistent with the goals, policies and strategies of the following chapters and related maps in the Comprehensive Plan may be awarded a density bonus of 5%:				
		[1] Chapter 3, Natural Resources Policies and Strategies;				
		[2] Chapter 4, Marine Resources Policies and Strategies;				
		[3] Map 4, Natural Areas Wildlife Habitat;				
		[4] Map 9, Wetlands; or				
		[5] Map 10, Areas of High Potential for Wildlife Habitat.				
	(5)	An open space cluster plan that allows public access to the open space may be awarded a density bonus of 5%. The nature of public access required to trigger this bonus is pedestrian traffic. The instrument granting access, acceptable to the Planning Board, may reasonably restrict the use of motorized vehicles.			**NA**	

Project Name/District: Wire Road Subdivision - Rural District - Tax Map 75, Lot 1 | Date of Review: 1/21/16; 02/19/16; 08/18/16

Prepared By: Office of Planning & Development | Company Name: Town of Wells

§ 145-49. Residential Cluster Development. [Amended 11-7-2006] [Amended 06-14-2016]			**Application Meet Requirements**			
			Yes	**No**	**NA**	**Comments**
	(6)	An open space cluster plan that preserves, and provides for their use as such in perpetuity, the Town's historic, traditional New England seacoast and rural community character and appearance by preserving and incorporating existing historic structures and natural features of historic significance may be awarded a density bonus of 5%.			**NA**	
	(7)	An open space cluster plan that effectively links large areas of the dedicated open space to adjoining dedicated open space may be awarded a density bonus of 5%.			**NA**	
	(8)	An open space cluster plan that preserves scenic vistas especially toward the seacoast from Route 1 and along scenic corridors especially along Routes 1, 9, 109, and roads in rural areas may be awarded a density bonus of 5%.			**NA**	
	(9)	A "unit for unit" density bonus may be granted for open space cluster plans that include affordable housing for moderate-income buyers. For example, if 10% of the dwelling units in the project are affordable for moderate-income buyers then a density bonus of 10% may be awarded. The matching density bonus may be doubled for open space cluster plans that include affordable housing for low-income buyers. For example, if 10% of the dwelling units in the project are affordable for low-income buyers then a density bonus of 20% may be awarded.			**NA**	
E.	Aquifer Protection District. Where the parcel is located in the Rural District and partially in the Aquifer Protection District the permitted density for that portion of the lot within the Aquifer Protection District may be doubled, transferred to the portion of the lot located in the Rural District, and counted towards total bonus density, provided that:				**NA**	The parcel is not located in the Aquifer Protection District
	(1)	All land within the Aquifer Protection District is included within the common land or open space;				
	(2)	A conservation easement is granted to the Town or to the Kennebunk, Kennebunkport and Wells Water District over that portion of the subdivision located within the Aquifer Protection District; and				
	(3)	All stormwater detention facilities shall be located outside the Aquifer Protection District. Stormwater retention facilities may be located in the Aquifer Protection District.				

Project Name/District: Wire Road Subdivision - Rural District - Tax Map 75, Lot 1 | Date of Review: 1/21/16; 02/19/16; 08/18/16

Prepared By: Office of Planning & Development | Company Name: Town of Wells

§ 145-49. Residential Cluster Development. [Amended 11-7-2006] [Amended 06-14-2016]			**Application Meet Requirements**			
			Yes	**No**	**NA**	**Comments**
F.	Management of open space. The open space portion of the cluster development site shall be permanently dedicated open space by covenant recorded at the Registry of Deeds and shown on the recorded subdivision plans. No more than 2% of the open space shall be impervious surfaces that are accessory to the proposed use of open space (i.e., roads, parking areas, sheds, etc.), of which total structural coverage shall not exceed 600 square feet. Nonroofed or elevated structures (i.e., walking paths) are allowed. The designated open space shall not be used for additional building lots.		**Y***			The open space management provisions shall be documented in the homeowner association documents. HOA documents have been provided and to be reviewed by the Town Engineer. HOA documents provided in May 2016. Town Planner review prepared in June 2016 noting various items to be addressed. Town Attorney review prepared in July 2016 noting various items to be addressed. **HOA documents, Bylaws, sample deed, etc. provided by applicant's attorney on 8/18/16. Town Engineer review underway.**
	(1)	Prior to the sale of any lots, the open space shall be controlled by one or more of the following methods:				
		(a) Ownership by an association of the owners of the dwelling units within the development;				
		(b) Ownership by an association of the owners of the dwelling units within the development with a conservation easement granted to the Town or recognized conservation organization;				
		(c) Dedication to the Town as public open space; and/or				
		(d) Transfer, with permanent restrictions, to a land trust or other recognized conservation organization.				
	(2)	The developer may structure the control of the common open space in one or more of the above methods. The Planning Board shall approve the arrangements for the ownership, control and maintenance of the common open space as part of the subdivision approval. No changes in use or management of the common open space shall be made without the approval of the Planning Board.				

Project Name/District: Wire Road Subdivision - Rural District - Tax Map 75, Lot 1

Date of Review: 1/21/16; 02/19/16; 08/18/16

Prepared By: Office of Planning & Development

Company Name: Town of Wells

§ 145-49. Residential Cluster Development. [Amended 11-7-2006] [Amended 06-14-2016]		**Application Meet Requirements**			
		Yes	**No**	**NA**	**Comments**
G.	Homeowners' association management of open space. If the open space will be owned and/or managed by the owners within the cluster development, then a homeowners' association shall be created to own and manage the common lands and facilities. Covenants for mandatory membership in the homeowners' association, setting forth the owner's rights, interest and responsibilities, and providing for the assessment of lots or units to fund common expenses shall be required and approved by the Planning Board and shall be included in the deed for each lot. The documents shall also include a management plan for the common open space and facilities.	**Y***			HOA documents provided in May 2016. Town Planner review prepared in June 2016 noting various items to be addressed. Town Attorney review prepared in July 2016 noting various items to be addressed. **HOA documents, Bylaws, sample deed, etc. provided by applicant's attorney on 8/18/16. Town Engineer review underway.**

Project Name/Tax Map & Lot #:	Wire Road Subdivision/ Tax Map 75, Lot 1	District:	R
Prepared By:	Planning Office	Review Date:	05/31/16; 06/17/16; 08/18/16
Plans Dated:	05/23/16; 08/19/16	Final Plan Revisions Submittal Date:	05/24/16; 08/19/16

Chapter 202
Subdivision of Land

§ 202-9. Final plan for major subdivision			Application Meet Requirements				
			Yes	No	NA	Waiver	Comments
B.	Submissions. The final plan shall consist of one or more maps or drawings drawn to a scale of not more than 100 feet to the inch. Plans for subdivisions containing more than 75 acres may be drawn at a scale of not more than 200 feet to the inch. Plans shall be no larger than 24 inches by 36 inches in size and shall have a margin of two inches outside of the border line on the left side for binding and a one-inch margin outside the border along the remaining sides. Space shall be reserved thereon for endorsement by the Board. One reproducible, stable-based transparent original and three copies of the plan shall be submitted. In addition, the applicant shall submit 11 copies of the final plan, reduced to a size of 11 inches by 17 inches, and all accompanying information to the Office of Planning and Development no less than 10 days prior to the meeting. The application for approval of the final plan shall include the following information: **[Amended 4-13-1999]**		**Y**				On 2/22/16 the Planning Board granted a waiver and permitted the plan scale of 1” = 150 feet for sheets 1.2 and 1.5. Other sheets scale is 1” = 80 feet or 1” = 40 feet.
	(1)	Proposed name of the subdivision and the name of the municipality in which it is located, plus the Assessor's map and lot numbers.	**Y**				Wire Road Subdivision noted. Proposed Map and Lot numbers noted.
	(2)	An actual field survey of the boundary lines of the tract, giving complete descriptive data by bearings and distances, made and certified by a licensed land surveyor. The corners of the tract shall be located on the ground and marked by monuments. The plan shall indicate the type of monument set or found at each lot corner.	**Y**				See sheet 1.5 prepared by Jim Wright, PLS dated 9/12/07.

Project Name/Tax Map & Lot #:	Wire Road Subdivision/ Tax Map 75, Lot 1	District:	R
Prepared By:	Planning Office	Review Date:	05/31/16; 06/17/16; 08/18/16
Plans Dated:	05/23/16; 08/19/16	Final Plan Revisions Submittal Date:	05/24/16; 08/19/16

§ 202-9. Final plan for major subdivision			Application Meet Requirements				
			Yes	No	NA	Waiver	Comments
	(3)	The number of acres within the proposed subdivision, location of property lines, existing buildings, watercourses and other essential existing physical features.	Y				100.26 total acres noted on sheet 1.1. Trees greater than 24” in diameter at breast height that exist are identified on sheets 1.3, 2.1 and 2.2. See note 22 on sheet 1.1. Lots 1A-6 and 1A-5 shall maintain trees noted to be 24” in diameter. A 50’ no-cut buffer with a 120 liner foot 8’ tall solid stockade (wood or vinyl) fence is proposed for M 75, L 1-2. On 7/25/16 the Planning Board found the 8’ tall solid screening (fence) and 50’ wide no-cut buffer acceptable and required the fence to be installed 5’ from the abutting property line. A 25’ no-cut buffer is proposed for M 68, Lot 2-A; the Planning Board found the 25’ no cut buffer is sufficient on 7/25/16. Sheet 1.4 depicts the parcel lot line and the 50’ buffer adjacent to proposed cluster lot 1A-34. A 50’ no-cut buffer is required for this lot as well. Existing abutting properties and driveways depicted.

Project Name/Tax Map & Lot #:	Wire Road Subdivision/ Tax Map 75, Lot 1	District:	R
Prepared By:	Planning Office	Review Date:	05/31/16; 06/17/16; 08/18/16
Plans Dated:	05/23/16; 08/19/16	Final Plan Revisions Submittal Date:	05/24/16; 08/19/16

§ 202-9. Final plan for major subdivision			Application Meet Requirements				
			Yes	No	NA	Waiver	Comments
	(4)	Indication of the type of sewage disposal to be used in the subdivision. When sewage disposal is to be accomplished by connection to the public sewer, a written statement from the Wells Sanitary District indicating that the district has reviewed and approved the sewerage design shall be submitted.	Y*				Test pits by Michael Cuomo, CSS#211. See sheet 5.4 and 7.4. **Plan to note (note 5 on sheet 1.1) that individual septic tanks to be installed on each lot.** Groundwater Nitrate Evaluation Analysis provided by Sevee & Maher Engineers, Inc dated 1/12/2016. The Sevee & Maher Engineers analysis was peer reviewed by Stonehill Environmental, Inc. A peer review letter dated 7/14/16 was prepared by Cynthia Thayer of Stonehill Environmental. On 7/25/16 the Planning Board voted to accept the third party hydrogeologic review of the water supply.
	(5)	Indication of the type of water supply system(s) to be used in the subdivision.	Y				Sheet 1.1, Note 5. Individual drilled on-site wells are to be provided on each lot. Well restrictions depicted on sheet 1.2. Dug wells are prohibited.
		(a) When water is to be supplied by public water supply, a written statement from the Kennebunk, Kennebunkport and Wells Water District shall be submitted indicating that the district has reviewed and approved the water system design. A written statement shall be submitted from the Fire Chief approving all hydrant locations or other fire protection measures deemed necessary.	Y*				**See note 24, which is to be renumbered note 25..** Additional hydrant proposed on Wire Road as requested by the Fire Chief. A written statement from the Fire Chief regarding the proposed fire protection was provided dated 6/8/16
		(b) The Board makes a finding that adequate groundwater resources to support one- and two-family homes, in both quantity and quality, are available generally throughout the Town of Wells. However:	Y				Groundwater Nitrate Evaluation Analysis provided by Sevee & Maher Engineers, Inc dated 1/12/2016. The Sevee & Maher Engineers analysis was peer reviewed by Stonehill Environmental, Inc. A peer review letter dated 7/14/16 was prepared by Cynthia Thayer of Stonehill Environmental. On 7/25/16 the Planning Board voted to accept the third party hydrogeologic review of the water supply.

Project Name/Tax Map & Lot #:	Wire Road Subdivision/ Tax Map 75, Lot 1	District:	R
Prepared By:	Planning Office	Review Date:	05/31/16; 06/17/16; 08/18/16
Plans Dated:	05/23/16; 08/19/16	Final Plan Revisions Submittal Date:	05/24/16; 08/19/16

§ 202-9. Final plan for major subdivision			Application Meet Requirements				
			Yes	No	NA	Waiver	Comments
		[1] When a proposed subdivision is not served by the Kennebunk, Kennebunkport and Wells Water District, evidence of adequate groundwater quality shall be required for proposed subdivisions in the vicinity of known sources of potential groundwater contamination, such as the Wells landfill, Bragdon septage disposal site and the Spiller sludge disposal site. The results of a primary inorganic water analysis performed upon a well on the parcel to be subdivided or from wells on adjacent parcels, between the parcel to be subdivided and the potential contamination source, shall be submitted.			**NA**		The subdivision is not located within such contamination sources. Well water testing is a standard condition of approval.
		[2] When a proposed subdivision is to be served by a private central water system or contains structures other than one- or two-family dwellings, evidence of adequate groundwater quantity shall be required.			**NA**		Subdivision not served by a central water system. All dwellings in the subdivision to be single family units.
	(6)	The date the plan was prepared, North point (identified as magnetic or true), graphic map scale, and names and addresses of the record owner, subdivider and individual or company who or which prepared the plan.	**Y**				Noted.
	(7)	The location of any zoning boundaries affecting the subdivision	**Y**				Parcel is located entirely within the Rural District.
	(8)	The location and size of existing and proposed sewers, water mains, culverts and drainageways on or adjacent to the property to be subdivided.	**Y**				See sheets 2.1 to 2.4.
	(9)	The location, names and present widths of existing and proposed streets, highways, easements, building lines, parks and other open spaces on or adjacent to the subdivision. The plan shall contain sufficient data to allow the location, bearing and length of every street line, lot line and boundary line to be readily determined and be reproduced upon the ground. These lines shall be tied to reference points previously established. The length of all straight lines, the deflection angle radii, length of curves and central angles of curves, tangent distances and tangent bearings for each street shall be included.	**Y***				Width of Wire Road is 49.5 feet per Town Clerk Office Vol. D Pages 139, 144 & 145.

Project Name/Tax Map & Lot #:	Wire Road Subdivision/ Tax Map 75, Lot 1	District:	R
Prepared By:	Planning Office	Review Date:	05/31/16; 06/17/16; 08/18/16
Plans Dated:	05/23/16; 08/19/16	Final Plan Revisions Submittal Date:	05/24/16; 08/19/16

§ 202-9. Final plan for major subdivision		Application Meet Requirements				
		Yes	No	NA	Waiver	Comments
(10)	The width and location of any streets or public improvements shown upon the Official Map and the Comprehensive Plan, if any, within the subdivision.	Y				
(11)	All parcels of land proposed to be dedicated to public use and the conditions of such dedication. Written offers of cession to the municipality of all public open spaces shown on the plan and copies of agreements or other documents showing the manner in which open spaces to be retained by the developer or lot owners are to be maintained shall be submitted. If land is to be offered to the municipality, written evidence that the municipal officers are satisfied with the legal sufficiency of the written offer of cession shall be included.			NA		Dedicated Open Spaces areas are not noted to be for public use.
(12)	A list of construction items with cost estimates that will be completed by the developer prior to the sale of lots and, for subdivisions containing more than 20 lots, a separate list of construction and maintenance items, with both capital and annual operating cost estimates, that must be financed by the municipality or quasi-municipal districts.	Y*				A construction cost estimate was submitted on 5/24/16. **To be reviewed by the Town Engineer. Costs for 120 linear foot fence for abutter and Monumentation?** The subdivision to contain more than 20 lots/dwellings. A separate cost estimate for capital and annual operating costs was provided in the "Community Impact Summary" prepared for Wire Road Subdivision.
	(a) These lists shall include but not be limited to: schools, including busing; street maintenance and snow removal; police and fire protection; solid waste disposal; recreation facilities; stormwater drainage; wastewater treatment; and water supply.	Y				See the "Community Impact Summary" prepared for Wire Road Subdivision which outlines the calculated expenses and revenues expected to be generated by this development.
	(b) The developer shall provide an estimate of the net increase in taxable assessed valuation at the completion of the construction of the subdivision.	Y				See the "Community Impact Summary" prepared for Wire Road Subdivision which outlines the taxable valuation of the this subdivision to be $340,000 based on the mil rate of $9.95/ 1,000 (each unit contributes $3,383 per year in real estate tax and $300 in automobile excise tax.

Project Name/Tax Map & Lot #:	Wire Road Subdivision/ Tax Map 75, Lot 1	District:	R
Prepared By:	Planning Office	Review Date:	05/31/16; 06/17/16; 08/18/16
Plans Dated:	05/23/16; 08/19/16	Final Plan Revisions Submittal Date:	05/24/16; 08/19/16

§ 202-9. Final plan for major subdivision		Application Meet Requirements				
		Yes	No	NA	Waiver	Comments
(13)	If any portion of the subdivision is in a flood-prone area, the boundaries of any flood hazard areas and the one-hundred-year flood elevation shall be delineated on the plan.	**Y**				A copy of FEMA Map provided. No Flood Zones mapped, see sheet 1.1, Note 15.
(14)	A soil erosion and sedimentation control plan, prepared in accordance with the Maine Erosion and Sedimentation Control Handbook for Construction: Best Management Practices, published by the Maine Department of Environmental Protection and the Cumberland County Soil and Water Conservation District, 1991. **[Amended 4-27-2007]**	**Y**				Erosion and sedimentation control notes are noted on sheet 5.2. Best management practices shall be followed.
(15)	A stormwater management plan, prepared by a registered professional engineer in accordance with the most recent edition of Stormwater Management For Maine: BMPS Technical Design Manual, published by the Maine Department of Environmental Protection, 2006. Another methodology may be used if the applicant can demonstrate it is equally or more applicable to the site. **[Amended 4-27-2007]**	**Y***				A stormwater management plan prepared by Lewis Chamberlain of Attar Engineering, Inc dated 3/8/2016, Revised 5/13/16. See Town Engineer drainage review memo dated 7/21-16. The analysis prepared by Attar Engineering meets or exceeds Town requirements. **Minor items to be addressed regarding foundation drains.**
(16)	If any portion of the proposed subdivision is located in the direct watershed of Ell Pond or within 500 feet of the upland edge of Hobbs Pond and meets the following criteria: 1. five or more lots or dwelling units created within any five-year period; or 2. any combination of 800 linear feet of new or upgraded driveways and/or streets, then the following shall be submitted or indicated on the plan: **[Added 4-27-2007]**			**NA**		Subdivision not located within such areas.
	(a) A phosphorus impact analysis and control plan conducted using the procedures set forth in MDEP Phosphorus Design Manual, Volume II of the Maine Stormwater Best Management Practices Manual, 2006. The analysis and control plan shall include all worksheets, engineering calculations, and construction specifications and diagrams for control measures, as required by the most recent edition of Stormwater Management For Maine: BMPS Technical Design Manual, published by the Maine Department of Environmental Protection, 2006;					
	(b) A long-term maintenance plan for all phosphorus control measures;					

Project Name/Tax Map & Lot #:	Wire Road Subdivision/ Tax Map 75, Lot 1	District:	R
Prepared By:	Planning Office	Review Date:	05/31/16; 06/17/16; 08/18/16
Plans Dated:	05/23/16; 08/19/16	Final Plan Revisions Submittal Date:	05/24/16; 08/19/16

§ 202-9. Final plan for major subdivision		Application Meet Requirements				
		Yes	No	NA	Waiver	Comments
	(c) The contour lines shown on the plan shall be at an interval of no less than five feet; and					
	(d) Areas with sustained slopes greater than 25% covering more than one acre shall be delineated.					

Town of Wells, Maine
Planning Board

Chapter 202
Subdivision of Land

PROJECT INFORMATION		
General:	**Project Name:**	Wire Road Subdivision
	# Lots/ Dwellings Proposed:	40 lots/ 40 dwelling units
	Applicant:	Highpine Properties, LLC, PO Box 339, Wells, ME 04090
	Landowner:	Highpine Properties, LLC, PO Box 339, Wells, ME 04090
	Location:	Wire Road, Wells, Maine
	Existing Use:	Vacant, undeveloped land
	Proposed Land Use:	A 40 lot/dwelling unit residential cluster major subdivision with private street right-of-ways and Open Space
	Tax Parcel ID:	Tax Map 75, Lot 1
	Zoning District:	Rural District
	Land Use, Art. VII Performance Standards:	145-49. Residential Cluster Development
	Design Engineer:	Attar Engineering, Inc 1284 State Rd, Eliot, ME 03903
	Final Plan Application Submission Date:	5/24/2016
	Plan Submission Date:	5/24/2016
Project Description:	Attar Engineering has submitted a Final Subdivision Application for a 40 lot/ 40 single family dwelling unit Residential Cluster Development (major subdivision) on behalf of the property owner Highpine Properties, LLC. The property is located off of Wire Road and is identified as Tax Map 75, Lot 1 and is located within the Rural District. The property is 100.26 acres in size and 73.73 acres is proposed as dedicated Open Space. The subdivision proposes private street right-of-ways, common on-site septic systems, and individual on-site drilled wells.	
Approval Dates:	Preliminary Plan Approval:	3/21/2016
	Final Plan Approval:	**To be determined**
Public Hearings:	Preliminary Public Hearing	3/21/2016
	Final Public Hearing	6/20/2016
Subdivision Plan Sheets:	1.1 to 1.5, 2.1 to 2.4, 5.1 to 5.4, and 7.1	

DRAFT

PROJECT HISTORY

1. On 1/15/14 the applicant submitted a subdivision pre-application and sketch plan for 44 dwelling unit Multifamily Development Major Subdivision.
2. On 1/16/14 the Planning Office mailed notices to abutter of the pre-application submission and of the 1/27/14 Planning Board meeting.
3. On 1/27/14 the Planning Board voted to receive the subdivision pre-application and determined that a site walk of the site was to be conducted in April.
4. On 4/21/14 the Planning Board voted to schedule a site walk for the subdivision for 4/26 at 10:00am.
5. On 4/22/14 the Planning Office mailed abutters notice of the site walk.
6. On 4/26/14 the Planning Board conducted a site walk of the property.
7. On 4/29/14 the Planning Office prepared a site walk results memo for the Planning Board and applicant.
8. On 5/5/14 the Planning Board reported the results of the site walk.
9. On 10/20/14 the applicant submitted a subdivision pre-application and sketch plan for a 43 dwelling unit Multifamily Development Major Subdivision to the Planning Office.
10. On 10/24/14 the Planning Office mailed notices to abutters of the pre-application submission and of the 11/3/14 Planning Board meeting.
11. On 10/29/14 the Planning Office prepared a memo to the Planning Board regarding the project history and initial pre-application review comments.
12. On 11/3/14 the Planning Board received the subdivision pre-application and voted to find that another site walk of the property was not necessary.
13. On 8/21/15 the applicant submitted a subdivision pre-application and sketch plan for a 43 dwelling unit Multifamily Development Major Subdivision to the Planning Office.
14. On 9/3/15 the Planning Office mailed notices to abutters of the pre-application submission and of the 9/14/15 Planning Board meeting.
15. On 9/10/15 the Planning Office prepared a memo to the Planning Board regarding the project history and initial pre-application review comments.
16. On 9/14/15 the Planning Board did not discussed the application as the applicant notified the Planning Office that further plan revisions are being pursued and the applicant requested to be removed from the agenda.
17. On 10/20/15 the applicant submitted a subdivision pre-application and sketch plan for a 40 lot/ dwelling unit Residential Cluster Major Subdivision to the Planning Office.
18. On 10/21/15 the Planning Office mailed notices to abutters of the pre-application submission and of the 11/2/15 Planning Board meeting.
19. On 10/22/15 the Planning Office prepared a memo to the Planning Board regarding the project history and initial pre-application review comments.
20. On 11/2/15 the Planning Board received the subdivision pre-application and voted to waiver the requirement for a site walk.
21. On 1/12/16 the applicant submitted a Preliminary Subdivision Application and plan to the Planning Office.
22. On 1/13/16 the Planning Office mailed notices to abutters of the Preliminary Subdivision Application submission and of the 1/25/16 Planning Board meeting.
23. On 1/21/16 the Planning Office prepared Article V, VII and Preliminary Completeness (202-8) review checklists as wells as a memo summarizing the review for the Planning Board and applicant.
24. The 1/25/16 Planning Board meeting was postponed due to a lack of quorum.
25. On 2/4/16 the applicant emailed revised subdivision plans to the Planning Office for review.
26. The 2/8/16 Planning Board meeting was postponed due to inclement weather.

DRAFT

PROJECT HISTORY

27. On 2/14/16 the applicant submitted a road name request form.
28. On 2/18/16 the Planning Office prepared plan mark-ups with suggested changes to be made.
29. On 2/19/16 the Planning Office prepared updated Article V, VII and Preliminary Completeness (202-8) review checklists and a memo for the Planning Board and applicant.
30. On 2/22/16 the Planning Board received the Preliminary Subdivision Application; voted to grant a 10% density bonus based on 73% Open Space being proposed; voted to allow a plan scale of 1" = 150' for sheets 1.2 and 1.5; and voted to find the application preliminary complete and to schedule a Preliminary Public Hearing for 3/21/16.
31. On 3/11/16 the Planning Office mailed certified notice to abutters of the Preliminary Public Hearing on 3/21/16.
32. On 3/15/16 the Planning Office emailed plan mark-ups with recommended plan changes.
33. On 3/16/16 the Planning Office updated the Article V, VII and completeness review checklists and emailed those to the applicant.
34. On 3/17/16 the applicant emailed revised subdivision plans to the Planning Office for review.
35. On 3/17/16 the Planning Office prepared updated Article V, VII and completeness review checklists and drafted the Preliminary Findings of Fact & Decisions. Minor plan mark-ups with recommended changes and a memo summarizing the reviews was also prepared.
36. On 3/21/16 the Planning Board conducted a Preliminary Public Hearing and workshop. The Planning Board voted to granted Preliminary Subdivision approval and the Preliminary Findings of Fact & Decisions were signed.
37. On 5/23/16 the Assessor's Office granted road name approval to the 2 road names proposed.
38. On 5/24/16 the Final Subdivision Application, plans and supporting materials were submitted to the Planning Office for review.
39. On 5/25/16 the Planning Office mailed notice to abutters of the Final Subdivision Application submission and of the 6/6/16 Planning Board meeting.
40. On 5/31/16 the Planning Office prepared a draft final completeness (202-9) checklist, memo and plan markups for the applicant and Planning Board.
41. On 6/2/16 the Planning Office forwarded the review checklist and memo to the applicant.
42. On 6/6/16 the Planning Board voted to receive the final subdivision application, voted to permit the DEP submission prior to final approval, voted to require the final plans to be stamped by a PLS prior to final approval, voted to find the application complete and voted to schedule a final public hearing for the 6/20/16 Planning Board meeting.
43. On 6/8/16 the Planning Office received a letter from the Fire Chief regarding fire protection.
44. On 6/10/16 the Planning Office mailed abutters certified notice of the 6/20/16 Planning Board Final Public Hearing.
45. On 6/14/16 the Staff Review Committee commented on the subdivision application for the Planning Board.
46. On 6/16/16 the Planning Office prepared an updated final completeness checklist, recommended plan notes, plan markups, draft compliance (202-12)/ Findings of Fact & Decisions, a HOA review memo from the Town Engineer, and memo for the applicant and Planning Board.
47. On 6/20/16 the Planning Board conducted a final public hearing for the proposed subdivision. The Planning Board then conducted a workshop and voted to waive the requirement to locate all trees greater than 24" in diameter abh, voted to find the Open Space suitable, voted to allow driveways to be located on either private road as applicable, voted to find shared driveways are not required, voted to find the proposed Monumentation as suitable, and voted to continue the workshop for 60 days. The Planning Board and applicant agreed to obtain an estimate for peer review of the hydrogeologic analysis prepared for the

DRAFT

PROJECT HISTORY
subdivision. 48. On 7/5/16 the Planning Office received the peer review estimate from Stonehill Environmental. The applicant agreed to the estimate. 49. On 7/7/16 the Planning Office received the funds for the peer review by Stonehill Environmental. 50. On 7/19/16 the Planning Office received the results of the Stonehill Environmental peer review. 51. On 7/21/16 the Planning Office e received the Town Attorney review comments of the proposed subdivisions HOA Declarations and Bylaws. 52. On 7/21/16 the Planning Office prepared an updated review memo. The Town Engineer also prepared a drainage review memo for the applicant. 53. On 7/22/16 the Planning Office forwarded the plan markups and memos to the applicant. 54. On 7/25/16 the Planning Board accepted the Stonehill Environmental peer review, voted to require 8' tall solid fencing for an abutter, voted to approve a 25' no cut buffer for another abutter, voted to approve the performance guarantee proposal and phasing proposed. The Planning Board then voted to continue the workshop for 60 days. 55. On 8/16/16 the applicant confirmed receipt of the 7/22/16 plan markups via email. 56. On 8/17/16 the Planning Office received revised subdivision plans for review and the DEP Permit approval for the subdivision. 57. On 8/18/16 the Planning Office received revised HOA documents, sample deed and fire pond easement from the applicant's attorney for review by the Town Engineer. 58. On 8/18/16 the Planning Office prepared plan markups for the applicant to address, note recommendations, and updated Article VII, and completeness (202-9) checklists. The Planning Office also prepared updated compliance (202-12)/ Final Findings of Fact & Decisions and memo for the applicant and Planning Board. 59. On 8/18/16 the Planning Office emailed the recommended plan markups, recommended notes, and reminders of needed items. 60. On 8/19/18 the Planning Office received a revised cost estimate. 61. On 8/19/16 the Town Engineer prepared a HOA and Deed review memo making note of issues to be addressed. 62. On _____the Planning Office received revised subdivision plans. 63. On 8/19/16 the Planning Office prepared finalized draft compliance (202-12)/ Final Findings of Fact & Decisions. 64. On 8/22/16 the Planning Board reviewed the revised plan submission, voted to permit the cluster lots to have 40% lot coverage, voted to find the application compliant, voted to approve and sign the Findings of Fact & Decisions, and voted to approve and sign the subdivision plan.

§ 202-12. General Standards	Findings & Decisions
In reviewing applications for a subdivision, the Board shall consider the following general standards and make findings that each has been met prior to the approval of a final plan. In all instances the burden of proof shall be upon the applicant.	

DRAFT

§ 202-12. General Standards			Findings & Decisions
A.	Conformance with Comprehensive Plan. All proposed subdivisions shall be in conformity with the Comprehensive Plan of the municipality and with the provisions of all pertinent state and local codes and ordinances.		**THE PLANNING BOARD FINDS THAT THIS STANDARD SHALL BE MET.**
B.	Retention of open spaces and natural or historic features. [Amended 6-11-2013]		**THE PLANNING BOARD FINDS THAT THIS STANDARD SHALL BE MET.**
	(1)	In any subdivision with no more than five lots or dwellings units, no dedicated open space is required. In any subdivision with at least six lots or dwelling units and no more than 10 lots or dwelling units, there shall be a minimum of 10% or 20,000 square feet, whichever is greater, of the total property net area dedicated as open space. Off-site dedication of open space land may be approved by the Planning Board if excess land is provided and the land has a greater benefit to the public than land within the development. In any subdivision with more than 10 lots or dwelling units, there shall be a minimum of 35% of the total property net area dedicated as open space.	This subdivision proposes more than 10 lots/ dwelling units (40 are proposed) and is required to provide a minimum of 35% Open Space. This subdivision proposes approximately 73% open space or 73.7 acres) of the 100.26 acre parcel. See note 24. Common land (Open Space and 50' wide ROWs) totals 79.94 acres. (39.46 + 34.27 + .30 + 4.53 + 1.28 = 79.94 acres).
	(2)	Land reserved for open space purposes shall be of a character, configuration and location suitable for the particular use intended. A site intended to be used for active recreation purposes, such as a playground or a play field, should be relatively level and dry. Sites selected primarily for scenic or passive recreation purposes shall have such access as the Planning Board may deem suitable. The configuration of such sites shall be deemed adequate by the Planning Board with regard to scenic or historic attributes to be preserved, together with sufficient areas for trails, lookouts, etc., where necessary and appropriate.	See note 20. The Open Space shall be retained by the Wire Road Subdivision Homeowner's Association and shall be used for Open Space and passive recreation A single accessory structure not exceeding 600 SF is permitted and requires a building permit. No more than 2% of the Open Space shall be impervious surface. (145-49F) On 6/20/16 the Planning Board found the Open Space areas proposed to be suitable.
	(3)	Reserved open space land, acceptable to the Planning Board and subdivider, may be dedicated or conveyed to the municipality, a land trust, or other recognized conservation organization. Such reservation may also be accomplished by incorporation into homeowners' association or condominium association documents or into restrictive deed covenants. (See § **145-49**, residential cluster development standards.)	No such reservation proposed.

DRAFT

§ 202-12. General Standards		Findings & Decisions
	(4) The Planning Board may require that the development plans include a landscape plan that will show the preservation of any existing trees larger than 24 inches in diameter at breast height, the replacement of trees and vegetation, graded contours, streams and the preservation of scenic, historic or environmentally significant areas. Cutting of trees on the northerly borders of lots should be avoided as far as possible, to retain a natural wind buffer.	Trees greater than 24" in diameter at breast height that exist are identified on sheets 1.3, 2.1 and 2.2. See note 22 on sheet 1.1. Lots 1A-6 and 1A-5 shall maintain trees noted to be 24" in diameter. A 50' no-cut buffer with a 120 liner foot 8' tall solid stockade (wood or vinyl) fence is proposed for M 75, L 1-2. On 7/25/16 the Planning Board found the 8' tall solid screening (fence) and 50' wide no-cut buffer acceptable and required the fence to be installed 5' from the abutting property line. A 25' no-cut buffer is proposed for M 68, Lot 2-A; the Planning Board found the 25' no cut buffer is sufficient on 7/25/16. Sheet 1.4 depicts the parcel lot line and the 50' buffer adjacent to proposed cluster lot 1A-34. A 50' no-cut buffer is required for this lot as well.
C.	Blocks. Where street lengths exceed 1,000 feet between intersections with other streets, the Board may require an utility/pedestrian easement, at least 20 feet in width, to provide for underground utility crossings and/or a pedestrian pathway of at least five feet in width. Maintenance obligations of the easement shall be included in the written description of the easement.	**THE PLANNING BOARD FINDS THAT THIS STANDARD SHALL NOT APPLY.** Not applicable. No blocks are created.
D.	Lots.	**THE PLANNING BOARD FINDS THAT THIS STANDARD SHALL BE MET.**

DRAFT

§ 202-12. General Standards			Findings & Decisions
	(1)	All lots shall meet the minimum requirements of Chapter 145, Land Use, for the zoning district in which they are located. The lot configuration should be designed to maximize the use of solar energy on building sites with suitable orientation.	§145-30. Rural District requirements apply to the 40 single family dwelling units proposed. The 40 single family lots proposed are also a Residential Cluster Development and are permitted by §145-49 to be 20,000 SF in size if not served by public sewer. All lots proposed are at least 20,000 SF in size. Per 145-49 Residential Cluster lots may have a 20' setback from subdivision ROWs and 15' lot line setbacks. The Planning Board approved the reduction of setbacks on 3/21/16. See note 3 on sheet 1.1. Proposed lots all appear to have 80' or more of street frontage. The Planning Board approved the reduction of street frontage for the cluster lots on 3/21/16. 25' x 2 = 50' setback/ buffer required for all non-clustered residential abutters. This 50' setback is shown on the subdivision plans. See notes 2, 3, and 4 on sheet 1.1. Maximum lot coverage of each lot is 40% as permitted by 145-49C5. **Planning Board to consider voting to allow 40% lot coverage for the cluster lots as all are less than 40,000 SF in size, per 145-49.C.5**. The subdivision is not located within the Shoreland Overlay District. The applicant proposes 73.73 acres to be dedicated Open Space or 73% Open Space. A 10% density bonus was requested. A 10% density bonus was granted by the Planning Board on 2/22/16 for providing 73% Open Space. See note 4 on sheet 1.1.
	(2)	Lot configuration and area shall be designed to provide for adequate off-street parking and service facilities based upon the type of development contemplated. Wherever possible, parking areas shall be laid out to coincide with building locations to maximize solar energy gain.	All driveways shall be designed to comply with Chapter 201. See note 13. Parking on Wire Road, Camerons Lane and Brendans Way is prohibited. Driveways are prohibited onto Wire Road.

DRAFT

§ 202-12. General Standards			Findings & Decisions
	(3)	Lots with multiple frontages shall be avoided wherever possible. When lots do have frontage on two or more roads, the plan and deed restrictions shall indicate that vehicular access shall be located only on the less traveled way.	See note 13. Driveways are prohibited onto Wire Road. Lots 1, 2, 3, 4, 5, 6, 7, 8, 9, and 10 have street frontage on Wire Road and Camerons Lane. **Deeds for these lots must restrict vehicular access from Wire Road.** Lots 5, 6, 17 and 18 have street frontage on Camerons Lane and Brendans Way. On 6/20/16 the Planning Board voted to permit driveways for these lots to be constructed onto either roadway.
	(4)	Wherever possible, side lot lines shall be perpendicular to the street.	
	(5)	The subdivision of tracts into parcels with more than twice the required minimum lot size shall be laid out in such a manner as to preclude future resubdivision.	See note 16 on sheet 1.1.
	(6)	Where public utilities could be extended to the subdivision in the foreseeable future, the subdivision shall be designed to accommodate the extensions of utilities.	Extensions of such utilities in this area are not planned for the foreseeable future. Lots shall be served by centralized private septic system and private individual drilled wells.
	(7)	If a lot on one side of a river, tidal water, road or other similar barrier fails to meet the minimum requirements for lot size, it may not be combined with a lot on the other side of the river, tidal water or road to meet the minimum lot size.	No such lots proposed.
	(8)	Odd-shaped lots in which narrow strips are joined to other parcels in order to meet minimum lot size requirements are prohibited. The ratio of lot length to width shall not be more than three to one.	Odd shaped lots not proposed.
	(9)	Lots shall be numbered in accordance with Chapter 201, Article I, Street Naming and Numbering, of the Wells Municipal Code.	
	(10)	Where the Board finds that safety considerations so require, driveways of adjoining lots shall be combined or joined so as to minimize the number of driveway entrances and maximize the distance between entrance points.	On 6/20/16 the Planning Board found that shared driveways are not required.
	(11)	Proposed lots shall not be permitted to have driveway entrances onto existing arterial or collector streets unless the Planning Board determines that no reasonable alternate exists.	See note 13. Driveways are prohibited onto Wire Road. Lots 1, 2, 3, 4, 5, 6, 7, 8, 9, and 10 have street frontage on Wire Road and Camerons Lane. **Deeds for these lots must restrict vehicular access from Wire Road.**
E.	Utilities.		**THE PLANNING BOARD FINDS THAT THIS STANDARD SHALL BE MET.**

DRAFT

§ 202-12. General Standards			Findings & Decisions
	(1)	Utilities shall be installed underground except as otherwise approved by the Board.	See note 11 on sheet 1.1 which all utilities to be installed underground. Transformer locations may vary based on CMP requirements. Relocation of transformers and associated easements do not constitute or require an amendment to the approval. Underground utilities shall be installed prior to the installation of the final gravel base of the road.
	(2)	Underground utilities shall be installed prior to the installation of the final gravel base of the road.	See note 11 on sheet 1.1.
	(3)	The size, type and location of streetlights, electric and gas lines, telephone and other utilities shall be shown on the plan and approved by the Board.	See sheets 2.1 to 2.4 and details on sheets 5.1 to 5.4.
F.	Required improvements. The following improvements are required for all subdivisions unless waived by the Board in accordance with provisions of these regulations.		
	(1)	Monuments.	**THE PLANNING BOARD FINDS THAT THIS STANDARD SHALL BE MET.** Sheet 1.5 is a boundary survey plan prepared by Jim Wright, PLS of Post Road Surveying dated 9/12/2007 showing existing monuments of the 100.26 acre parcel.
		(a) Stone or concrete monuments shall be set at all street intersections and points of curvature, but no further than 750 feet apart along street lines without curves or intersections.	Sheets 1.3 and 1.4 depict proposed Monumentation. All Monumentation proposed meets these requirements.
		(b) Stone or concrete monuments shall be set at all corners and angle points of the subdivision boundaries where the interior angle of the subdivision boundaries is 135º or less. New monumentation shall not be required at corner or angle points where there is existing monumentation that complies with this section.	
		(c) Stone monuments shall be a minimum of four inches square at the top and four feet in length and set in the ground at final grade level. After they are set, drill holes one-half-inch deep shall locate the point or points described above.	
		(d) Concrete monuments shall be portland cement reinforced with half-inch reinforcement bar. Concrete monuments shall be either four inches square or four inches in diameter and four feet in length and set in the ground at final grade with their top flush to four inches above the final grade.	
		(e) All other subdivision boundary corners and angle points, as well as all lot boundary corners and angle points, shall be marked by suitable monumentation.	On 6/20/16 the Planning Board found the Monumentation shown to be acceptable.
	(2)	Water supply.	**THE PLANNING BOARD FINDS THAT THIS STANDARD SHALL BE MET.**

DRAFT

§ 202-12. General Standards		Findings & Decisions
	(a) When a subdivision is to be served by the Kennebunk, Kennebunkport and Wells Water District, the complete supply system, including fire hydrants, shall be installed at the expense of the subdivider.	Subdivision not served by the KKW Water District.
	[1] The subdivider shall provide a written statement from the Water District that adequate water for both domestic and fire-fighting purposes can be provided without placing an undue burden on the source, treatment facilities or distribution system involved. The subdivider shall be responsible for paying the costs of system improvements necessary to serve the subdivision.	
	[2] The size and location of mains, gate valves, hydrants and service connections shall be reviewed and approved in writing by the Water District and the Fire Chief.	
	(b) When the location of a subdivision does not allow for a financially reasonable connection to the Kennebunk, Kennebunkport and Wells Water District, the Planning Board may allow the use of individual wells or a private community water system.	The subdivision proposed individual drilled wells for the proposed 40 lots. Well exclusion zones are identified.
	[1] Dug wells shall be permitted only if it is demonstrated to be not economically feasible to develop other groundwater sources and shall be constructed so as to prevent infiltration of surface water into the well. Unless otherwise permitted by the Board, the subdivider shall prohibit dug wells by deed restrictions and a note on the plan.	See note 5 on sheet 1.1. Dug wells are prohibited.
	[2] If a central water supply system is provided by the subdivider, the location and protection of the source and the design, construction and operation of the system shall conform to the standards of the Maine Rules Relating to Drinking Water (10-144 A.C.M.R. 231).	Not applicable.
	[3] Fire protection. **[Amended 3-11-2002]**	
	[a] The subdivider shall construct dry hydrants connected to ponds or water storage tanks, provide fire hydrants connected to a public water source or implement an alternative program approved by the Fire Chief to provide for adequate water for fire-fighting purposes within the subdivision. An easement shall be granted to the municipality providing access to the hydrants or other improvements where necessary. If a subdivision has fewer than 10 lots or dwelling units or any combination of lots and dwelling units, the Board, may waive the requirement for an adequate on-site water supply only upon submittal of evidence that:	The subdivision proposes to construct an on-site fire pond (Wetpond 11) with 2 dry hydrant connections; 1 off of Camerons Lane within the subdivision and 1 off of Wire Road. See note 25 on sheet 1.1 regarding the fire pond installation and requirements. Homes are also permitted to be constructed with residential sprinkler systems. Fire Chief letter dated 6/8/2016 has been provided finding the proposed on-site fire pond and hydrants to be suitable for firefighting purposes.

DRAFT

§ 202-12. General Standards	Findings & Decisions
[i] There is a fire pond, fire hydrant connected to public water, or another water source within one mile of the subdivision that the subdivider has obtained the legal right to use for fire protection purposes; and	Not applicable.
[ii] The Fire Chief has determined that the proposed water source has sufficient capacity to serve the needs of the subdivision and any other subdivisions currently using or relying on the water source for fire protection.	See note 25 on sheet 1.1.
[b] For purposes of this section, the 1-mile distance is measured from the pond, water source or fire hydrant to the driveway of the subdivision residence located farthest from the water supply along routes that fire trucks can safely travel year round.	The proposed fire pond (Wetpond 11)/ hydrants are located within 1 mile of the subdivision lots proposed.
[4] The results of the water quality test submitted shall indicate that the groundwater meets the primary drinking water standards of the Maine Rules Relating to Drinking Water for those categories tested. If the Board has reason to believe, due to previous uses of the property or due to previous or existing uses of neighboring property, that the existing water quality may be threatened by contaminants not tested for in the primary inorganic water analysis, it may require the water to be tested for those contaminants.	This is a condition of approval to be provided prior to the issuance of a building permit.
(c) Prior to the issuance of a building permit for the construction of any principal structure in a subdivision, the applicant shall present evidence of suitable water supply to the Code Enforcement Officer. This evidence shall consist of:	This is a condition of approval.
[1] A letter from the Kennebunk, Kennebunkport and Wells Water District indicating availability of service; or	Not applicable.
[2] The results of a primary inorganic water analysis performed upon the well to serve the structure indicating the groundwater meets the primary drinking water standards of the Maine Rules Relating to Drinking Water for those categories tested.	This is a condition of approval.
(3) Sewage disposal.	**THE PLANNING BOARD FINDS THAT THIS STANDARD SHALL BE MET.**
(a) Public system.	Subdivision not served by the Wells Sanitary District.
[1] A sanitary sewer system shall be installed at the expense of the subdivider when there is a public sanitary sewer line located within 1,000 feet of the proposed subdivision at its nearest point. The Wells Sanitary District shall certify that providing service to the proposed subdivision is within the capacity of the district's collection and treatment system.	
[2] The district shall review and approve in writing the construction drawings for the sewage system.	

DRAFT

§ 202-12. General Standards			Findings & Decisions
		(b) Private systems.	Subdivision shall be served by centralized private subsurface wastewater disposal system. See note 5 on sheet 1.1. **Plan to note (note 5 on sheet 1.1) that individual septic tanks to be installed on each lot.**
		[1] The developer shall submit evidence of soil suitability for subsurface sewage disposal prepared by a Maine licensed site evaluator in full compliance with the requirements of the State of Maine Subsurface Wastewater Disposal Rules. In addition, on lots in which the limiting factor has been identified as being within 24 inches of the surface, a second site with suitable soils shall be shown as a reserve area for future replacement of the disposal area. The reserve areas shall be shown on the plan and restricted so as not to be built upon.	Test pits by Michael Cuomo, CSS#211. See sheet 5.4 and 7.4. **Plan to note (note 5 on sheet 1.1) that individual septic tanks to be installed on each lot.** Groundwater Nitrate Evaluation Analysis provided by Sevee & Maher Engineers, Inc dated 1/12/2016. The Sevee & Maher Engineers analysis was peer reviewed by Stonehill Environmental, Inc. A peer review letter dated 7/14/16 was prepared by Cynthia Thayer of Stonehill Environmental. On 7/25/16 the Planning Board voted to accept the third party hydrogeologic review of the water supply. See DHHS Wire Road Approval letter dated 5/16/16.
		[2] In no instances shall a disposal area be permitted on soils or on a lot which requires a new system variance from the subsurface wastewater disposal rules.	No such system proposed or permitted.
	(4)	Stormwater management. **[Amended 4-27-2007]**	**THE PLANNING BOARD FINDS THAT THIS STANDARD SHALL BE MET.** A stormwater management plan prepared by Lewis Chamberlain of Attar Engineering, Inc dated 3/8/2016, Revised 5/13/16. See Town Engineer drainage review memo dated 7/21-16. The analysis prepared by Attar Engineering meets or exceeds Town requirements. **Note to be added to plan regarding foundations and foundation drains.**
		(a) Where a subdivision is traversed by a stream, river or surface water drainageway, or where the Board feels that surface water runoff to be created by the subdivision should be controlled, there shall be provided easements or drainage rights-of-way with swales, culverts, catch basins or other means of channeling surface water within the subdivision and over other properties. This stormwater management system shall be designed by a registered professional engineer.	
		(b) Drainage easements for existing watercourses or proposed drainageways shall be provided and indicated on the plan.	

DRAFT

§ 202-12. General Standards			Findings & Decisions
		(c) The developer shall provide a statement from the designing engineer that the proposed subdivision will not create erosion, drainage or runoff problems either in the subdivision or in other properties. The engineer shall certify that peak runoff from the subdivision onto other properties shall not be increased either in volume or duration from the peak runoff characteristics existing prior to development.	
		(d) A stormwater management plan, meeting the standards of Chapter 201, Streets and Sidewalks, Articles II and III, Wells Municipal Code, shall be submitted.	
		(e) For subdivisions that require MDEP review under 38 M.R.S.A. § 481 et seq. (Site Location of Development), a stormwater management plan shall be submitted which complies with the Site Location of Development permit and the requirements of MDEP Chapter 500 Stormwater Regulations.	
		(f) For subdivisions that do not require a Site Location of Development permit, but that require a MDEP permit pursuant to 38 M.R.S.A. § 420-D, a stormwater management plan shall be submitted which complies with the requirements of MDEP Chapter 500 Stormwater Regulations.	Site Location Permit approval from MDEP provided dated August 2016 (L-26984-L3-A-N). See note 10 on sheet 1.1.
		(g) For subdivisions outside of the watershed of a great pond that neither require a Site Location of Development permit, nor a MDEP permit pursuant to 38 M.R.S.A. § 420-D, a stormwater management plan shall be submitted which incorporates the low-impact development techniques set forth in Volume I, Chapter 3 of the Maine Stormwater Best Management Practices Manual, 2006 (LID Techniques) on each individual lot approved by the Planning Board when such LID Techniques are adopted by MDEP. At such time that the MDEP adopts the LID Techniques, the Planning Board shall adopt them for use in approving subdivisions for the Town of Wells.	
		(h) For subdivisions located within the watershed of a great pond containing: 1. five or more lots or dwelling units created within any five-year period; or 2. any combination of 800 linear feet of new or upgraded driveways and/or streets, a stormwater management plan shall be submitted that meets the phosphorus allocation across the entire subdivision in accordance with the methodology described in the MDEP Phosphorus Design Manual, Volume II of the Maine Stormwater Best Management Practices Manual, 2006.	
		(i) The Planning Board may require a hydrologic analysis for any site in areas with a history of flooding or in areas with a potential for future flooding, associated with cumulative impacts of development. This hydrologic analysis would be in the form of a "Downstream Analysis" under conditions of the ten-year, twenty-four-hour storm, the twenty-five-year, twenty-four-hour storm, and the one-hundred-year, twenty-four-hour storm, as described below:	

DRAFT

§ 202-12. General Standards				Findings & Decisions
			[1] Downstream Analysis Methodology: The criteria used for the downstream analysis is referred to as the "10% rule." Under the 10% rule, a hydrologic and hydraulic analysis for the ten-year, twenty-four-hour storm, the twenty-five-year, twenty-four-hour storm, and the one-hundred-year, twenty-four-hour storm is extended downstream to the point where the site represents 10% of the total drainage area. For example, a ten-acre site would be analyzed to the point downstream with a drainage area of 100 acres. This analysis should compute flow rates and velocities downstream to the location of the 10% rule for present conditions and proposed conditions. If the flow rates and velocities increase by more than 5% and/or if any existing downstream structures are impacted, the designer should redesign and incorporate detention facilities.	
G.	Streets.			**THE PLANNING BOARD FINDS THAT THIS STANDARD SHALL BE MET.**
	(1)	All streets in a subdivision shall meet Chapter 201, Streets and Sidewalks, Articles II and III, Wells Municipal Code.		The proposed streets must comply with the requirements of Chapter 201. Camersons Lane and Brandons Way are 50' wide right of ways with private 24' wide paved streets with 3' wide gravel shoulders for a total travel width of 30'. **Driveway culvert detail on sheet 5.1 needed.**
	(2)	Any subdivision expected to generate average daily traffic of 200 trips per day or more shall have at least two street connections with existing public streets, streets shown on an Official Map or streets on an approved subdivision plan for which performance guaranties have been filed and accepted. Any street with an average daily traffic of 200 trips per day or more shall have at least two street connections leading to existing public streets, streets shown on an Official Map or streets on an approved subdivision plan for which performance guaranties have been filed and accepted. Said two street connections' center lines shall be no closer than 400 linear feet apart. Traffic generation rates shall be based on the Traffic Generation Manual, 1988 Edition, Institute of Transportation Engineers. Some typical traffic generation rates are:		The subdivision is expected to generate a daily traffic of 200 trips per day or more. Traffic generation is calculated to be 400 trips per day. Two street connections leading to Wire Road are proposed approximately 630 +/- linear feet apart
		(a) Single-family house: 10.0 trips per day per unit.		40 x 10.0 = 400.00 trips per day for the subdivision
		(b) Residential condominium: 5.9 trips per day per unit.		
		(c) Motel: 10.2 trips per day per room.		
		(d) Industrial: 7.0 trips per day per 1,000 square feet of floor space.		

DRAFT

§ 202-12. General Standards			Findings & Decisions
	(3)	In any subdivisions located in the Residential A Zoning District or east of U.S. Route 1 provisions shall be made for the interconnection of proposed streets with other subdivisions or adjacent properties if it is determined to be practical and desirable by the Planning Board.	Subdivision not located within the RA zone or east of Route 1.
H.	Land features.		**THE PLANNING BOARD FINDS THAT THIS STANDARD SHALL BE MET.**
	(1)	Topsoil shall be considered part of the subdivision and shall not be removed from the site except for surplus topsoil from roads, parking areas and building excavations. Topsoil shall not be removed from the site until completion of construction and inspection by the Town to assure four inches of topsoil has been spread over all areas to be grassed.	This is a condition of approval.
	(2)	Except for normal thinning, landscaping and cutting trees to provide access to direct sunlight, existing vegetation shall be left intact to prevent soil erosion. The Board shall require a developer to take the following measures to correct and prevent soil erosion in the proposed subdivision: **[Amended 4-27-2007]**	This is a condition of approval.
		(a) The proposed subdivision shall prevent soil erosion and sedimentation from entering waterbodies, wetlands, and adjacent properties.	
		(b) The procedures outlined in the erosion and sedimentation control plan shall be implemented during the site preparation, construction, and clean-up stages.	
		(c) Cutting or removal of vegetation along waterbodies shall not increase water temperature or result in shoreline erosion or sedimentation.	
		(d) Topsoil shall be considered part of the subdivision and shall not be removed from the site except for surplus topsoil from roads, parking areas, and building excavations.	
	(3)	To prevent soil erosion of shoreline areas the cutting or removal of vegetation shall only be permitted as regulated in § 145-33 of Chapter 145, Land Use, of the Wells Municipal Code.	This is a condition of approval.
	(4)	Dedication and maintenance of common open space and services.	Wire Road Subdivision HOA documents provided by the applicant in May 2016. Town Planner review prepared in June 2016 noting various items to be addressed. Town Attorney review prepared in July 2016 noting various items to be addressed. **HOA documents, Bylaws, sample deed, etc. provided by applicant's attorney on 8/18/16. Town Engineer review memo dated 8/19/16.**

DRAFT

§ 202-12. General Standards			Findings & Decisions
		(a) All common land shall be owned jointly or in common by the owners of the dwelling units by means of a homeowners' association, by an association which has as its principal purpose the conservation or preservation of land in essentially its natural condition or by the municipality.	See note 20. **See recommended note addition to note 24: " The common land is a total……1.38) is to be owned by the Homeowner's Association. A portion of the undeveloped Open Space may be conveyed to the Town of Wells in fee or per a conservation easement if accepted by the Board of Selectmen. Such a conveyance shall not be considered an amendment to the subdivision, but a plan must be recorded depicting the conveyance."**
		(b) Further subdivision of the common land or its use for other than noncommercial recreation or conservation purposes, except for easements for underground utilities, shall be prohibited. Structures and buildings accessory to noncommercial recreational or conservation uses may be erected on the common land.	See note 16 and note 20. Passive recreation use is proposed. **Is a conservation easement proposed? See recommended changes to note 24.**
		(c) The common open space shall be shown on the final plan with appropriate notation on the plan to indicate that:	See note 16, 20 and 22. Common land is a total of 79.94 acres, see note 24.
		[1] It shall not be used for future building lots; and	See note 16.
		[2] A part or all of the common open space may be dedicated for acceptance by the municipality.	**Possible dedication proposed, see note 24.**
		(d) If any or all of the common open space and services are to be reserved for use by the residents, the bylaws of the proposed homeowners' association shall specify maintenance responsibilities and shall be submitted to the Board prior to final plan approval.	See note 23 on sheet 1.1. **HOA document address maintenance responsibilities.**
		(e) Covenants for mandatory membership in the homeowners' association setting forth the owners' rights, interests and privileges in the association and the common property shall be reviewed by the Board and included in the deed for each lot or dwelling.	**HOA document address maintenance responsibilities.**
		(f) The homeowners' association shall have the responsibility of maintaining the common property.	**HOA document address maintenance responsibilities.**
		(g) The association shall levy annual charges against all owners of dwelling units to defray the expenses connected with the maintenance of common property and tax assessments.	**HOA document address maintenance responsibilities.**
		(h) The developer or subdivider shall maintain control of the common property and be responsible for its maintenance until development sufficient to support the association has taken place.	**HOA document address maintenance responsibilities.**
	(5)	Construction in flood hazard areas. When any part of a subdivision is located in a special flood hazard area as identified by the Federal Emergency Management Agency, the plan shall conform with Chapter 115, Floodplain Management, of the Wells Municipal Code.	No flood zone is present for the parcel per FEMA Map 2301580010D. See note 15 on sheet 1.1.
	(6)	Impact on groundwater.	

DRAFT

§ 202-12. General Standards		Findings & Decisions
	(a) When a hydrogeologic assessment is submitted, the assessment shall contain at least the following information:	Groundwater Nitrate Evaluation Analysis provided by Sevee & Maher Engineers, Inc dated 1/12/2016. The Sevee & Maher Engineers analysis was peer reviewed by Stonehill Environmental, Inc. A peer review letter dated 7/14/16 was prepared by Cynthia Thayer of Stonehill Environmental. On 7/25/16 the Planning Board voted to accept the third party hydrogeologic review of the water supply.
	[1] A map showing the basic soils types.	
	[2] The depth of the water table at representative points throughout the subdivision.	
	[3] Drainage conditions throughout the subdivision.	
	[4] Data on the existing groundwater quality, either from test wells in the subdivision or from existing wells on neighboring properties.	
	[5] An analysis and evaluation of the effect of the subdivision on groundwater resources. In the case of residential developments, the evaluation shall, at a minimum, include a projection of post-development nitrate-nitrogen concentrations at any wells within the subdivision, at the subdivision boundaries and at a distance of 1,000 feet from potential contamination sources, whichever is a shorter distance. For subdivisions within the watershed of a pond, projections of the development's impact on groundwater phosphate concentrations shall also be provided.	
	[6] A map showing the location of any subsurface wastewater disposal systems and drinking water wells within the subdivision and within 200 feet of the subdivision boundaries.	
	(b) Projections of groundwater quality shall be made at any wells within the subdivision and at the subdivision boundaries or at a distance of 500 feet from potential contamination sources, whichever is a shorter distance.	
	(c) Projections of groundwater quality shall be based on the assumption of drought conditions (assuming 60% of annual average precipitation).	
	(d) No subdivision shall increase any contaminant concentration in the groundwater to more than 1/2 of the primary drinking water standards. No subdivision shall increase any contaminant concentration in the groundwater to more than the secondary drinking water standards.	
	(e) If groundwater contains contaminants in excess of the primary standards and the subdivision is to be served by on-site groundwater supplies, the applicant shall demonstrate how water quality will be improved or treated.	
	(f) If groundwater contains contaminants in excess of the secondary standards, the subdivision shall not cause the concentration of the parameters in question to exceed 150% of the ambient concentration.	

DRAFT

§ 202-12. General Standards			Findings & Decisions
		(g) Subsurface wastewater disposal systems and drinking water wells shall be constructed as shown on the map submitted with the assessment. If construction standards for drinking water wells are recommended in the assessment, those standards shall be included as a note on the final plan and as restrictions in the deeds to the affected lots.	

§ 202-13. Performance Guaranties. [Amended 4-12-1999]			Findings & Decisions
A.	Types of guaranties.		**THE PLANNING BOARD FINDS THAT THIS STANDARD SHALL BE MET.**
	(1)	With submittal of the application for final plan approval, the applicant shall provide any one or a combination of the following performance guaranties for an amount adequate to cover the total site preparation and construction costs of all required improvements, taking into account the time span of the construction schedule and the inflation rate for construction costs:	This shall be met. See note 12 on sheet 1.1. On 7/25/16 the Planning Board voted to approve said note 12.
		(a) Either a certified check payable to the municipality or a savings account or certificate of deposit naming the municipality as owner for the establishment of an escrow account.	This shall be met. See note 12 on sheet 1.1. On 7/25/16 the Planning Board voted to approve said note 12.
		(b) A performance bond payable to the municipality issued by a surety company approved by the municipal officers or Town Manager.	This shall be met. See note 12 on sheet 1.1. On 7/25/16 the Planning Board voted to approve said note 12.
		(c) An irrevocable letter of credit (See Appendix B for a sample. Note: Appendix B, originally attached to the Subdivision Regulations, has not been reproduced in the Code. Consult the original Town records in the office of the Clerk.) from a financial institution establishing funding for the construction of the subdivision from which the municipality may draw if construction is inadequate, approved by the municipal officers or Town Manager.	This shall be met. See note 12 on sheet 1.1. On 7/25/16 the Planning Board voted to approve said note 12.
		(d) An offer of conditional approval prohibiting the sale of any units or lots until all required improvements serving those units or lots have been constructed to the satisfaction of the Town and in compliance with all ordinances, plans and specifications.	This shall be met. See note 12 on sheet 1.1. On 7/25/16 the Planning Board voted to approve said note 12.

DRAFT

	(2) The conditions and amount of the performance guaranty shall be determined by the Board with the advice of the Town Planner, Road Commissioner, municipal officers and/or Town Attorney. If an offer of conditional approval is made by the applicant, pursuant to Subsection A(1)(d), the applicant shall be required, in addition, to present a cash escrow, performance bond or irrevocable letter of credit, as described in Subsections A(1)(a) through (c) above, to cover the cost of restoring the site to a stable condition, should the applicant create erosion or sedimentation problems for an unreasonable duration during site preparation or during the construction of roads and/or utilities or other required improvements.	This shall be met. See note 12 on sheet 1.1. On 7/25/16 the Planning Board voted to approve said note 12.
B.	**Contents of guaranty.** The performance guaranty shall contain a construction schedule, cost estimates for each major phase of construction, taking into account inflation, provisions for inspections of each phase of construction, provisions for the release of part or all of the performance guaranty to the developer and a date after which the applicant will be in default, and the municipality shall have access to the funds to finish construction. The Board may require the services of a third party inspector, to be paid for at the expense of the applicant upon recommendation of the Town Manager.	**THE PLANNING BOARD FINDS THAT THIS STANDARD SHALL BE MET.** This shall be met. See note 12 on sheet 1.1. On 7/25/16 the Planning Board voted to approve said note 12.
C.	**Escrow account.** If the applicant chooses to establish an escrow account, a cash contribution to the account shall be made by either a certified check made out to the municipality, the direct deposit into a savings account or the purchase of a certificate of deposit. For any account opened by the applicant, the municipality shall be named as owner or co-owner, and the consent of the municipality shall be required for a withdrawal. Any interest earned on the escrow account shall be returned to the applicant unless the municipality has found it necessary to draw on the account, in which case the interest earned shall be proportionately divided between the amount returned to the applicant and the amount withdrawn to complete the required improvements. The Town Attorney and Town Treasurer shall review and have final authorization on the establishment of escrow accounts.	**THE PLANNING BOARD FINDS THAT THIS STANDARD SHALL BE MET.** This shall be met. See note 12 on sheet 1.1. On 7/25/16 the Planning Board voted to approve said note 12.
D.	**Performance bond.** If the applicant chooses to submit a performance bond, the performance bond shall detail any special conditions, the method for release of the bond or portions of the bond to the applicant and the procedures for collection by the municipality. The bond documents shall specifically reference the subdivision for which approval is sought.	**THE PLANNING BOARD FINDS THAT THIS STANDARD SHALL BE MET.** This shall be met. See note 12 on sheet 1.1. On 7/25/16 the Planning Board voted to approve said note 12.
E.	**Letter of credit.** If the applicant chooses to submit an irrevocable letter of credit from a bank or other lending institution, at a minimum the letter shall indicate that funds have been set aside for the construction of the subdivision and may not be used for any other project or loan. The Town Manager or Town Treasurer shall certify the bank or institution as acceptable to the Town. The Town Attorney shall review and, if found acceptable, approve the wording of all letters of credit.	**THE PLANNING BOARD FINDS THAT THIS STANDARD SHALL BE MET.** This shall be met. See note 12 on sheet 1.1. On 7/25/16 the Planning Board voted to approve said note 12.

DRAFT

F.	**Standard condition of approval**. As a standard condition of approval for all applications for which a performance guaranty is required pursuant to Subsection **K**, the Board shall require the applicant to enter into a binding agreement with the municipality regarding the development of the required improvements and the sale of lots or units in the subdivision until such time as one or more of the allowable performance guaranties have been accepted by the municipality.	**THE PLANNING BOARD FINDS THAT THIS STANDARD SHALL BE MET.** This shall be met. See note 12 on sheet 1.1. On 7/25/16 the Planning Board voted to approve said note 12.
	(1) The agreement shall prohibit the sale or occupancy of any lot or unit in the subdivision for which the improvements to be covered by the guaranty are required for access to or intended use of the lot until either:	**THE PLANNING BOARD FINDS THAT THIS STANDARD SHALL BE MET.** This shall be met. See note 12 on sheet 1.1. On 7/25/16 the Planning Board voted to approve said note 12.
	(a) It is certified by the Board, or its agent, that all of the required improvements have been installed in accordance with these regulations and the regulations of the appropriate utilities; or	
	(b) A performance guaranty, acceptable to the municipality, is submitted in an amount necessary to cover the completion of the required improvements at an amount adjusted for inflation and prorated for the portions of the required improvements already installed.	
	(2) Notice of the agreement and any conditions shall be on the final plan that is recorded at the Registry of Deeds. Release from the agreement shall follow the procedures for release of the performance guaranties contained in Subsection **H**.	
G.	**Phasing of development.** The Board may approve plans to develop a major subdivision in separate and distinct phases. This may be accomplished by limiting final approval to those lots abutting that section of the proposed subdivision street which is covered by a performance guaranty. When development is phased, road construction shall commence from an existing public way. The subdivision shall be divided in such a manner that each phase, when aggregated with the previous phase(s), shall meet the standards of these regulations. Final approval of lots in subsequent phases shall be given only upon satisfactory completion of all requirements pertaining to previous phases.	**THE PLANNING BOARD FINDS THAT THIS STANDARD SHALL BE MET.** See phasing proposed on Sheet 1.1**.** On 7/25/16 the Planning Board voted to permit phasing.
H.	**Release of guaranty**. Prior to the release of any part of the performance guaranty, the Board shall determine to its satisfaction, in part upon the report of the Town Manager and whatever other agencies and departments may be involved, that the proposed improvements meet or exceed the design and construction requirements for that portion of the improvements for which the release is requested.	**THE PLANNING BOARD FINDS THAT THIS STANDARD SHALL BE MET.**
I.	**Default.** If upon inspection the third party inspector, Municipal Engineer or other qualified individual retained by the municipality finds that any of the required improvements have not been constructed in accordance with the plans and specifications filed as part of the application, he or she shall so report in writing to the Code Enforcement Officer, the municipal officers, the Board and the applicant or builder. The municipal officers shall take any steps necessary to preserve the municipality's rights.	**THE PLANNING BOARD FINDS THAT THIS STANDARD SHALL BE MET.**

DRAFT

J.	**Private streets.** Where the subdivision streets are to remain private streets, the following words shall appear on the recorded plan: "All streets in this subdivision shall remain private roads to be maintained to Town standards by the developer or the lot owners and shall not be accepted or maintained by the Town."	**THE PLANNING BOARD FINDS THAT THIS STANDARD SHALL BE MET.** See note 13 on sheet 1.1.
K.	**Improvements guaranteed.** Performance guaranties shall be tendered for all improvements required to meet the standards of these regulations and for the construction of the public or private streets, stormwater management facilities, public or private sewage collection or disposal facilities and water systems that are shared by multiple dwelling units and erosion and sedimentation control measures, as well as any other improvements required by the Board.	**THE PLANNING BOARD FINDS THAT THIS STANDARD SHALL BE MET.** See note 12 on sheet 1.1. On 7/25/16 the Planning Board voted to approve said note 12.

§ 202-2. Purpose, criteria for approval.			**Findings & Decisions**
The purposes of these regulations are to assure the comfort, convenience, safety, health and welfare of the people of the Town of Wells, to protect the environment and to promote the development of an economically sound and stable community. To this end, in approving subdivisions within the Town of Wells, Maine, the Planning Board shall consider the following criteria and, before granting approval, shall make findings of fact that the provisions of these regulations have been met and that the proposed subdivision will meet the guidelines of 30-A M.R.S.A. § 4404.			
A.	The subdivision:		**The Planning Board finds that these standards shall be met.**
	(1)	Will not result in undue water or air pollution. In making this determination, the Board shall at least consider the elevation of the land above sea level and its relation to the floodplains; the nature of soils and subsoils and their ability to adequately support waste disposal; and the slope of the land and its effect on effluents;	
	(2)	Has sufficient water available for the reasonably foreseeable needs of the subdivision;	
	(3)	Will not cause an unreasonable burden on an existing water supply, if one is to be utilized;	
	(4)	Will not cause unreasonable soil erosion or reduction in the capacity of the land to hold water so that a dangerous or unhealthy condition may result;	
	(5)	Will not cause unreasonable highway or public road congestion or unsafe conditions with respect to use of the highways or public roads existing or proposed;	
	(6)	Will provide for adequate solid and sewage waste disposal;	
	(7)	Will not cause an unreasonable burden on the ability of the Town to dispose of solid waste and sewage if municipal services are to be utilized;	
	(8)	Will not have an undue adverse effect on the scenic or natural beauty of the area, aesthetics, historic sites or rare and irreplaceable natural areas or any public rights for physical or visual access to the shoreline;	

DRAFT

	(9)	Is in conformance with this chapter, the Comprehensive Plan for the Town and Chapter 145, Land Use, of the Wells Municipal Code, as amended;	
	(10)	Whenever situated, in whole or in part, within 250 feet of any pond, lake, river or tidal waters, will not adversely affect the quality of the body of water or unreasonably affect the shoreline of that body of water; and	
	(11)	Will not, alone or in conjunction with existing activities, adversely affect the quality or quantity of groundwater;	
B.	The subdivider has adequate financial and technical capacity to meet the above-stated standards;		**The Planning Board finds that these standards shall be met.**
C.	If any part of a subdivision is located in a flood-prone area, as indicated on the Federal Emergency Management Agency's Flood Boundary and Floodway Maps and Flood Insurance Maps, the subdivider shall determine the one-hundred-year flood elevation and flood hazard boundaries within the subdivision. The proposed subdivision plan shall include a condition requiring that principal structures will be constructed with their lowest floor, including the basement, at least one foot above the one-hundred-year flood elevation; and		**Not applicable.**
D.	The long-term cumulative effects of the proposed subdivision will not unreasonably increase a great pond's phosphorous concentration during the construction phase and life of the proposed subdivision.		**Not applicable.**

STANDARD CONDITIONS OF APPROVAL

1. Any subdivision not recorded in the Registry of Deeds within 90 days of the date upon which the plan is approved and signed by the Board shall become null and void, unless an extension is granted by the Board in writing before the expiration of the ninety-day period. (§202-9C(2))

2. Prior to the issuance of a building permit for a principal structure in the subdivision, the applicant shall present evidence of suitable water supply to the Code Enforcement Officer. The evidence shall consist of the results of a primary inorganic water analysis performed upon the well to serve the structure, indicating the groundwater meets the primary drinking water standards of the Maine Rules Relating to Drinking Water for those categories tested. (§202-12F(2)(b)[4])

3. Prior to the issuance of a building permit in any approved subdivision, the subdivider shall provide the Code Enforcement Officer with a letter from a registered land surveyor stating that all monumentation shown on the plan for the lot receiving the building permit and for the approved subdivision perimeter boundaries or phase therein as approved by the Planning Board has been installed. (§202-11A(5))

4. No changes, erasures, modifications or revisions shall be made in any final plan after approval has been given by the Planning Board and endorsed in writing on the plan, unless the revised final plan is first submitted and the Board approves any modifications, except in accordance with § 202-10A(3). (§202-9C(4))

5. The approval by the Board of a subdivision plan shall not be deemed to constitute or be evidence of any acceptance by the municipality of any street, easement or other area shown on such plan. (§202-9C(5))

6. Failure to commence substantial construction of the subdivision within five years of the date of approval and signing of the plan shall render the plan null and void. (§202-9C(6))

DRAFT

Town of Wells, Maine
Planning Board

FINDINGS OF FACTS & DECISIONS
Final Subdivision Application for "Wire Road Subdivision"

SPECIAL CONDITIONS OF APPROVAL

1. Prior to any construction activity at the site, the applicant/developer and selected contractor shall participate in a pre-construction conference with Town and other regulatory officials or utilities to review the project's construction considerations.

2. Prior to any construction on the site, the applicant shall post a performance guarantee in the form of cash escrow for the work involved with site stabilization, lot Monumentation and As-Built Plans of the subdivision. Prior to the issuance of any occupancy permit a performance guarantee shall be established to cover costs of the work associated with any incomplete roadway improvements, utilities, drainage and erosion control measures. The form and amount of this performance guarantee must be acceptable to the Town Manager.

3. The Town of Wells, Maine may employ the services of an engineering firm to assist in the inspection of roads and other infrastructure if, in the opinion of the Code Enforcement Office, the work necessary to insure compliance with Town ordinances or the requirements of this approval are beyond those capacities available by staff. The cost of such additional services will be borne by the developer and a cash escrow deposit provided.

4. Upon completion of construction of each phase, the applicant shall provide to the Town record as-built drawings of the roadway, drainage, lot Monumentation and utility related construction work.

5. Prior to scheduling the required pre-construction conference with the Town of Wells, the applicant shall submit revised Homeowners' Assocaition documents and sample Deeds addressing the comments raised within the Town Engineer memo dated 8/19/2016.

Dated at Wells, Maine this _____ day of _____, 2016

Wells Planning Board

By: _____
Charles Millian, Chairman

DRAFT

Planning & Development
208 Sanford Road, Wells, Maine 04090
Phone: (207) 646-5187, Fax: (207) 646-7046
Website: www.wellstown.org

Michael G. Livingston, Town Engineer/Planner	*mlivingston@wellstown.org*
Shannon M. L. Belanger, Planning Assistant	*sbelanger@wellstown.org*

Memo

Date: August 19, 2016

To: Planning Board

From: Michael G. Livingston, Town Engineer/Planner

Re: Wire Road Subdivision – Deed, HOA Declaration Review Comments

Sample Deeds Review & Recommendations:

Typical Lot Conveyance

- Add plan information: title, ect.
- Add "If applicable" items
  - Drainage easements (most lots have them)
  - Driveway restrictions for Wire Road (required in Ordinance)
- Add dug wells are prohibited restriction (required in Ordinance)

Conveyance of "common land"

- Address the conveyance of the roads (4.53 acres) to the Association
- Address the retention of the 50 foot right-of-way to remaining land (1.38 acres); fee or easement retained?

Fire Pond: excellent as proposed

Homeowners' Association Declaration Review & Recommendations:

Town Attorney Comments – all have been addressed except the following:

- All common areas should be addressed, roads, firepond, stormwater ponds
- Sample deed review
  (Addressed by Town Engineer, see above and below comments)

Town Engineer Comments

- Article 6.2. "Maintenance by the Association" should also include all the items listed in Note 23.
- Article 9.3. "Maintenance of Common Areas" should also include all the items listed in Note 23.
- Article 10.3. "Community sewer" should include, "Charges for the operation, septic tank pumping, repair…."
- Article 13.6. "Easements of Pond Maintenance and Flood Water" should be revised to Pond/Swale and reference the ability of the Association to maintain swales on the lots.

- Article 13.11. "Easements to Access Septic Tanks" should be added to allow the access to and the pumping of septic tanks on any lot.
- Article 13.10. Should include the restriction that parking is prohibited on the paved road surface.
- A copy of Exhibit D is needed
- An Exhibit E is needed, "Sewer System Maintenance Plan."

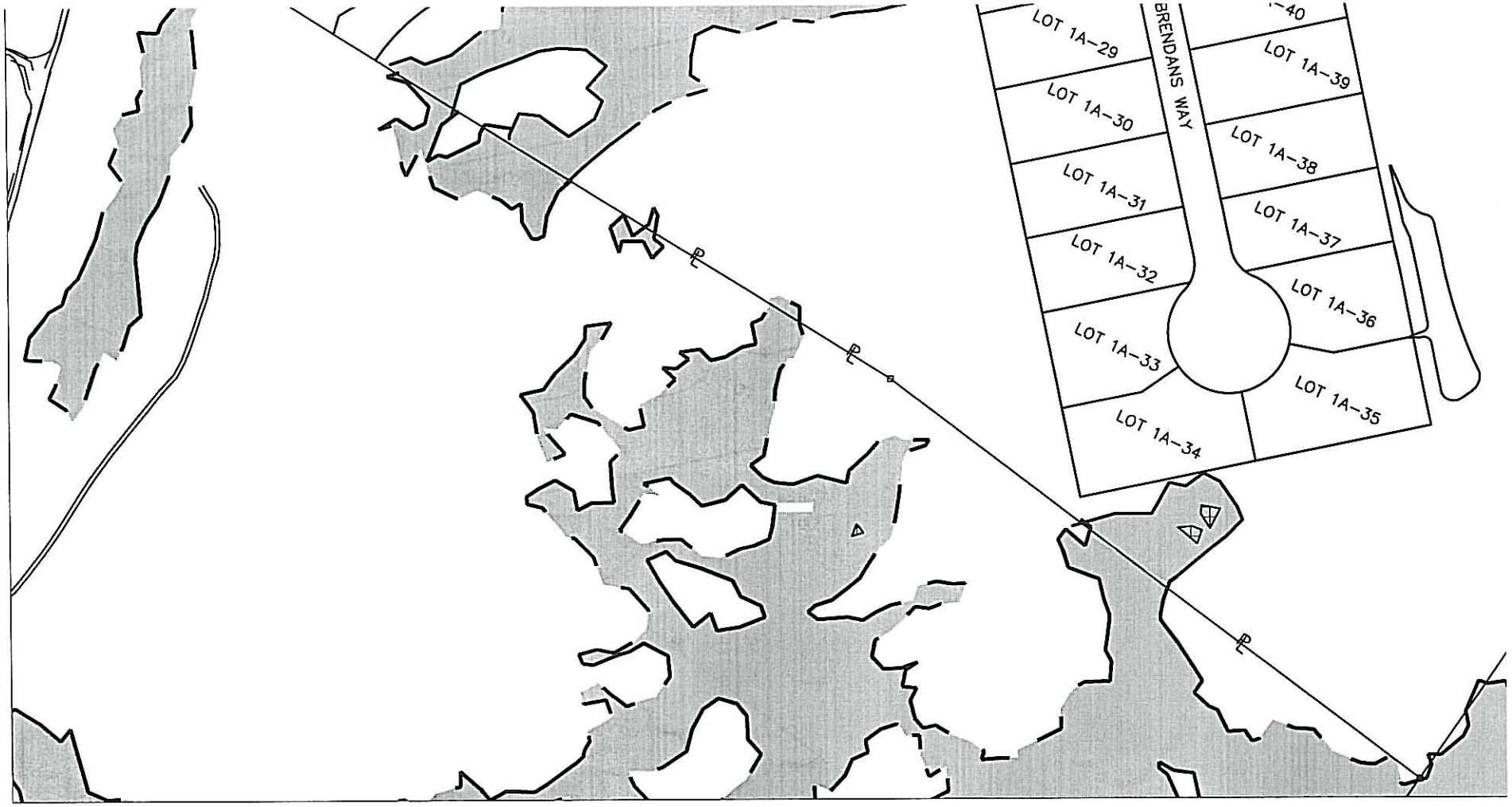

GENERAL NOTES (CON'T):

22. HOMEOWNERS' ASSOCIATION RESPONSIBLE FOR THE FOLLOWING:

23. A. ROAD MAINTENANCE AND REPAIR: PLOWING, PAVEMENT, ETC.
B. STORMWATER SYSTEM MAINTENANCE AND REPAIR: PONDS, SWALES, CULVERTS, INSPECTIONS, ETC.
C. SEWER SYSTEM OPERATION, MAINTENANCE AND REPAIR: SEPTIC TANK PUMPING, LEACH FIELDS, INSPECTIONS, ETC.
D. OPEN SPACE MANAGEMENT: BUFFERS INCLUDING FENCING, TRAILS, ETC.
E. FIRE POND MAINTENANCE AND REPAIR: HYDRANT ON CAMERONS LANE, POND VOLUME (DOES NOT INCLUDE HYDRANT ON WIRE ROAD)

23. THE COMMON LAND IS A TOTAL OF 79.94 ACRES (39.46 + 34.27 + .30 + 4.53 + 1.38).

24. THE FIRE POND (WETPOND 11) TO BE COMPLETED AND APPROVED BY THE FIRE DEPARTMENT PRIOR TO THE ISSUANCE OF A PHASE 2 BUILDING PERMIT. APPROVAL REQUIREMENTS OF THE FIRE POND ARE AS FOLLOWS:

A. POND IS CONSTRUCTED AS PROPOSED AND WRITTEN CERTIFICATION BY A PE IS PROVIDED THAT IT MEETS ISO REQUIREMENTS (MIN. 30,000 AVAILABLE GALLONS);

B. HYDRANTS ARE TESTED AND APPROVED BY THE WELLS FIRE DEPARTMENT;

C. AN EASEMENT FOR USE OF THE FIRE POND IS CONVEYED TO THE TOWN OF WELLS:

Opinion of Cost - Wire Road Subdivision
Wells, Maine

5/20/2016; revised 8/19/16 (fence/monumentation)
exclusions: blasting / building construction / landscaping / construction on lots

Item	Quantity	Unit	Unit Price	Price
Clear	15.0	AC	$4,500	$67,500
Stump & Grub	15.0	AC	$3,000	$45,000
Common Excavation	20,000	CY	$3	$60,000
Common Borrow	6,600	CY	$9	$59,400
Subbase Gravel	8,500	CY	$13	$110,500
Base Gravel	1,500	CY	$17	$25,500
Bituminous Pavement	1,800	TON	$75	$135,000
Asphalt Curb	0	LF	$20	$0
Pavement Markings/Stop Sign	4	LS	$500.00	$2,000
Sewer Manhole	14	EA	$3,500	$49,000
8" PVC Gravity	3,100	LF	$35	$108,500
8" PVC Water Main	0	LF	$40	$0
4" PVC Water Main	0	LF	$35	$0
3" Sewer Force Main	750	LF	$35	$26,250
1" Sewer Force Main	820	LF	$30	$24,600
Sewer Services	40	EA	$2,200	$88,000
Sewer Effluent Pump Station	1	EA	$40,000	$40,000
Distribution Manhole	1	EA	$15,000	$15,000
SSWDS (incl. piping and dbox)	4	EA	$60,000	$240,000
1" Water Services	0	EA	$2,000	$0
Dry Hydrant	2	EA	$7,500	$15,000
UG Elec. / Telephone / Cable TV	3,200	LF	$25	$80,000
12" HDPE	0	LF	$21	$0
15" HDPE	650	LF	$25	$16,250
Concrete Box Culvert	1	EA	$12,000	$12,000
Catch Basin / Drain Manhole	0	EA	$3,000	$0
Detention Pond 55	1	LS	$10,000	$10,000
Wetpond 11	1	LS	$50,000	$50,000
Wetpond 40	1	LS	$20,000	$20,000
Rip Rap Protection	1,000	SY	$18	$18,000
Level Spreader	3	LS	$1,000	$3,000
Topsoil, Seed, Mulch	400.0	MSF	$150	$60,000
Siltation Fence	6,000	LF	$3	$18,000
Stabilized Construction Entrance	2	EA	$800	$1,600
Solid Stockade Fence	120	LF	$66	$7,920
Lot Monumentation	1	LS	$16,000	$16,000
Subtotal 1				**$1,424,020**
Contingency (10% of Subtotal 1)				$142,402
Total				**$1,566,422**

JGC Comments to Town Counsel

MEMORANDUM

TO: Michael Livingston and Shannon Belanger FROM: Erin Kalakowsky

RE: Wire Road Subdivision

Date:June 15, 2016, updated July 21, 2016

This office has reviewed the proposed Documents for the Wire Road Subdivision and has the following suggestion/comments/requests:

A) Plans:
No Comment

B) Deed:
PLEASE PROVIDE A PROPOSED DEED FOR REVIEW. Would like to cross the deed with the plans/Declaration for specific note references.

Template deed attached.

C) Declaration:
1) Article 1.3. Add....after ' and Maine Law, "and Town of Wells ordinances", then Maine "and local" law shall control.

I have modified the language to include reference to local ordinance.

2) Article 1.4: Definition of Common Area should be more specific. The reference to Article 9.3 describes maintenance of Common Areas and not an inclusive list of all common areas .

I think it is as specific as it needs to be. Common Areas are all the property except the lots. Some parts of the Common Area (such as roads) are not Open Space.

3) Article 1.4: "Governing documents" references Section 1.2 which does not exist

Corrected. I added Section 1.2 as “Reserved.”

4) Article 4.1(a) Add specific reference to the Class A membership. There does not appear to be any further reference to the separate classes of membership. Elaborate on the separate classes.

Most PUD’s use class definitions in the way I use them here. The differences between the classes is defined in the bylaws, which give the developer more control during construction and sale. In contrast with a condominium, which provides explicit statutory guarantees of a developers “Development Rights” and “Special Declarant Rights,” PUD developments give no such protections of the developers financial interest. It is typically created by means of Class “A” and Class “B” members

5) Article 5: Generally speaking, does owner have an appeal process or is decision by reviewer final? Suggest adding an appeal process.

Section 8.1 of the attached Bylaws of Wire Road Association provide for an opportunity to be heard prior to the imposition of penalties, and an appeal to the Board.

6) Article 7.7: Suggest adding a minimum lease/rental period, and/or reference to Town of Wells Ordinance, to deter transient occupancy.

The Declarant may require a minimum rental period, but chooses not to do so at this time. Section 7.8 has been modified to allow minimum lease periods to be established by rule.

7) Section 7.9: State Declarant must also obtain Planning Board approval to change boundary lines.

Done.

8) Article 8: DECLARANT (during Declarant Control Period) is responsible for ensuring LOT OWNER compliance with all DEP/Army Corps, Town,etc. regardless of any provision to the contrary. Thereafter, ASSOCIATION shall be responsible for enforcement. Who is going to enforce violations? Article 8 states the Association and or Board may enforce app. ordinances/violations.

Section 13-A-2 of the Declaration requires the Association and lot owners to comply with DEP and Army Corps approvals and permits. Section 8.6 of the Declaration gives the Association the authority to enforce governmental requirements and provides and a violation of them by lot owners is also a violation of the Declaration. Your request goes further than that, asking that we establish potential liability (that is, being "responsible for") in the Declarant and the Association, not for their own action or inaction, but for those of lot owners, and asking that we do so in a private covenant. This we decline to do.

9) Article 9: Is open space being deeded to the Association? Any specific restrictions/language to be included. Need more information regarding the Open Space (i.e. will there be a Conservation Easement, trails....) Modify sections to state Open Space is being granted to the Association.

I have reviewed the DEP permit and order of August 12 and drafted a template deed to the Association containing the provisions I have found required to be included.

10) Article 13.10: Town of Wells and its various departments are "granted" easements ...

Altered language a bit

11) Article 17.1:Add Subject to requirements of governmental approvals and permits, "including the Town of Wells Planning Board" ...

Done

12Article 17.10: Add limiting language with regard to Transferring the Declarant's rights. The Declarant has reserved a lot of rights. Transferee must be subject to all T&P of Governing Documents.

Done

13) Article 20.1: Require Planning Board approval to terminate.

Done

14) Provide missing Exhibits for review

Exhibit A. Land Initially Submitted to This Declaration

Exhibit B. Lot Owners Liability for Assessments

Exhibit C. Initial Rules

Exhibit D. Stormwater System Maintenance Plan (TO BE SUBMITTED BY ATTAR AND INCORPORATED INTO THE DECLARATION)

GENERAL COMMENT: The Declaration contains many references to the "Board" as the governing authority. Recommend adding a Section defining Board,how it is created and amended, its officers, terms, meetings, etc.

Bylaws of the Association, a nonprofit corporation to be formed, are attached for informational purposes only. The internal governance of the Association is not really the subject of Planning Board responsibility or approval, in my view.

WARRANTY DEED

Highpine Properties, LLC, a Maine limited liability company, *for consideration paid*, grant to _____, whose mailing address is _____,

with **Warranty Covenants**, **as _____**, the land in Wells, York County, Maine, more particularly described as follows:

See Exhibit A for legal description

Witness its hand and seal this ____ day of _____, 2016.

Signed, sealed and delivered

in the presence of

Highpine Properties, LLC

_____ by _____
_____, its _____

STATE OF _____ _____, 2016

County of _____, ss.

Then personally appeared the above-named _____, and acknowledged the foregoing instrument to be his free act and deed in his said capacity, before me,

_____
Notary Public, Attorney at Law

(For Notaries), My commission expires _____.

_____
PRINT NAME

Exhibit A

Lot ___, Wire Road Subdivision
Highpine Properties, LLC
To
_____

A certain tract or parcel of land located in Wells, York County, Maine, and being lot ___ as shown on a plan entitled "_____" by _____ Surveying, Inc., dated _____, recorded in the York County Registry of Deeds at Plan File ___, page __, and being more particularly described as follows:

[Metes and bounds legal description]

[If applicable] This lot is conveyed subject to a 50 foot wide no cut buffer described as follows: [description]

By acceptance of this deed, the grantee agrees to be subject to Master Declaration and Bylaws of Wire Road Homeowners Association, recorded in the York County Registry of Deeds at Book _____, page ____.

This conveyance is subject to all terms and conditions of the Department of Environmental Protection Site Location of Development Act Order L-26984-L3-A-N dated August 12, 2016, recorded in the York County Registry of Deeds, Book _____, page ____.

This lot may not be further subdivided without prior approval of the Maine Department of Environmental Protection and the Wells Planning Board. It is conveyed subject to applicable municipal approvals of the Wire Road Subdivision by the Town of Wells.

WARRANTY DEED

Highpine Properties, LLC, a Maine limited liability company, *for consideration paid*, grant to Wire Road Homeowners Association, whose mailing address is P.O. Box 339, Wells, Maine 04090,

with **Warranty Covenants**, the land in Wells, York County, Maine, more particularly described as follows:

See Exhibit A for legal description

Witness its hand and seal this ____ day of _____, 2016.

Signed, sealed and delivered

in the presence of

Highpine Properties, LLC

_____ by _____

_____, its _____

STATE OF _____ _____, 2016

County of _____, ss.

Then personally appeared the above-named _____, and acknowledged the foregoing instrument to be his free act and deed in his said capacity, before me,

_____

Notary Public, Attorney at Law

(For Notaries), My commission expires _____.

_____

PRINT NAME

Exhibit A

Open Space areas, Wire Road Subdivision
Highpine Properties, LLC
To
Wire Road Homeowners Association

Three certain tracts of land located in Wells, York County, Maine, and being the lots shown as "Open Spaces" on plans entitled "Cluster Subdivision Plan, Wire Road Subdivision, Wire Rod, Wells, ME" by Attar Engineering for Highpine Properties, LLC, designated as Sheets 1.2, 1.3 and 1.4, recorded in the York County Registry of Deeds at Plan Book ____, pages ___ and being more particularly described as follows:

[Metes and bounds legal description]

The conveyed Open Space is subject to:

a. The Declaration and Bylaws of Wire Road Homeowners Association, recorded in the York County Registry of Deeds at Book _____, page ____.
b. All terms and conditions of the Department of Environmental Protection Site Location of Development Act Order L-26984-L3-A-N dated August 12, 2016, recorded in the York County Registry of Deeds, Book _____, page ____.
c. Limitations on use of Open Space conveyed in this deed, as that term is defined in the Wells Land Use Code, Chapter 145, and more particularly, Chapter 145, Section 49 F, as of the date of approval by the Wells Planning Board, and as further limited by conditions of approval of Wire Road Subdivision by the Wells Planning Board limiting use to passive recreation.

The portion of the Open Space designated on the Plans as "Forested No-disturbance Buffer" is subject to a Declaration of Restrictions by Highpine Properties, LLC, dated _____ and recorded in the York County Registry of Deeds at Book ____, page ____

NOTE: DEP approval, page 4 and 10 requires a plot plan attached to this deed that specifies the location of the buffer on the open space lot. To be recorded within 60 days of August 12, 2016.

DECLARATION OF COVENANTS, CONDITIONS AND RESTRICTIONS

WIRE ROAD SUBDIVISION

Highpine Properties, LLC

Deleted: ¶
¶
FOR

FURTHER SUBMISSION TO WELLS PLANNING BOARD

Revised from May 20, 2016 draft

August 15, 2016

Prepared by
Joseph G. Carleton, Jr.
Attorney at Law
P.O. Box 369
Wells, ME 04090

Table of Contents

Article I. Governing Documents 1

1.1. Scope and Applicability. 1

1.3. Conflicts and Ambiguities. 1

1.4. Definitions. 2

Article 2. Reserved. 2

Article 3. Reserved. 2

Article 4. Association Membership and Voting Rights. 2

4.1. Membership Classes. 3

4.2. Voting. 3

Article 5. Architecture, Landscaping and Aesthetic Standards. 3

5 .1. General. 3

5.2. Design Review Authority. 4

5.3. Guidelines and Procedures. 5

5.4. No Waiver of Future Approvals. 6

5.5. Variances. 6

5.6. Limitation of Liability. 7

5.7. Certificate of Compliance. 7

Article 6. Maintenance, Repair and Replacement. 7

6.1. Maintenance by Owners. 7

Article 7. Use, Conduct and Transfer of Interests in Lots. 8

7.1. Reserved. 8

7.2. Reserved. 8

7.3. Rulemaking Authority and Procedures. 8

7.4. Protection of Owners and Others. 9

7.5. Owners' Acknowledgment and Notice to Purchasers. 10

7.6. Residential and Related Uses Only. 10
7.7. Leasing. 10
7.8. Transfer of Title; Governing Documents to new Owner. 11
7.9. Subdivision; Boundary Changes. 11
Article 8. Compliance and Enforcement. 11
8.1. Compliance. 11
8.2. Remedies requiring Opportunity to be Heard; Liens. 11
8.3. Remedies not Requiring Prior Notice. 12
8.4. Board Decision to Pursue Enforcement Action. 13
8.5. Attorney's Fees and Costs. 13
8.6. Enforcement of Ordinances. 13
Article 9. Property Management. 14
9.1. Acceptance and Control of Association Property. 14
9.2. Management and Control. 14
9.3. Maintenance of Common Areas. 14
9.4. Discontinuation of Operation. 14
Article 10. Provision of Services. 15
10.1. Provision of Services to Lots. 15
10.2. Water Supply. 15
10.3. Community sewer. 15
Article 11. Association Insurance. 16
11.1. Required Coverages. 16
11.2. Deductibles. 16
11.3. Policy Requirements. 16
11.4. Insurance Premiums. 17
Article 12. Association Finances. 17
12.1. Association Expenses. 18
12.2. Obligation to pay Assessments. 18
12.2a. Annual Budget Development and Ratification. 19
12.3 Base Assessments. 20

12.4. Special Assessments. 20
12.5. Other Charges. 21
12.6. Declarant Financial Obligations to Association. 21
12.7. Lien for Assessments. 22
12.8. Exempt Property. 22
12.9. Capitalization of Association. 23
12.10. Resale Certificates. 23
Article 13. Easements; Restrictions. 23
13.1. Easements in Common Area. 23
13.2. Easements of Encroachment. 24
13.3. Easements for Utilities, Etc. 24
13.4. Easements to Serve Additional Property. 24
13.5. Easements for Maintenance, Emergency, and Enforcement. 25
13.6. Easements for Pond Maintenance and Flood Water. 25
13.7. Temporary Right and Easement for Service to Lots. 25
13.8. Easements for Dry Hydrants. 26
13.9. Permanent Dedication of Open Space. 26
13.10. Town Access over Roads and the Open Space. 26
Article 13-A. Compliance with Governmental Approvals. 26
13-A.1. Compliance with Density Bonus Requirements. 26
13-A. 2. Other Governmental Approvals and Permits. 26
Article 14. Disclosures and Waivers. 27
14.1. Changes in Plan. 27
Article 15. Rights of Lenders. 27
15.1. Notices of Action. 27
15.2. No Priority. 28
15.3. Notice to Association. 28
15.4. Failure of Mortgagee to Respond. 28
Article 16. Reserved. 28
Article 17. Additional Rights Reserved to the Declarant. 28

17.1. Special Development Rights. 28
17.2. Marketing and Sales Activities. 29
17.3. Access for Development Purposes. 29
17.4. Right to Approve Changes in Community Standards. 29
17.5. Additional Covenants and Restrictions. 29
17.6. Reserved. 29
17.7. Community Systems. 30
17.8. Easement to Inspect and Right to Correct. 30
17.9. Right to Notice of Design or Construction Claims. 30
17.10. Right to Transfer or Assign the Declarant's Rights. 30
17.11. Termination of Rights. 31
Article 18. Dispute Resolution and Limitation on Litigation. 31
18.1. Agreement to Encourage Resolution of Disputes Without Litigation. 31
18.2. Dispute Resolution Procedures. 32
18.3. Initiation of Litigation by Association. 32
Article 19. Changes in the Common Area. 34
19.1. Condemnation. 34
19.2. Partition. 34
19.3. Transfer, Mortgaging or Dedication of Common Areas. 34
Article 20. Termination and Amendment of this Declaration. 35
20.1. Term and Termination. 35
20.2. Amendment. 35
EXHIBIT A. LAND INITIALLY SUBMITTED TO THIS DECLARATION. 37
EXHIBIT B. LOT OWNERS LIABILITY FOR ASSESSMENTS. 39
EXHIBIT C. INITIAL RULES 40
EXHIBIT D. STORMWATER SYSTEM MAINTENANCE PLAN 43

DECLARATION OF COVENANTS, CONDITIONS AND RESTRICTIONS FOR WIRE ROAD SUBDIVISION

Article I. Governing Documents

1.1. *Scope and Applicability.*

This Declaration by Highpine Properties, LLC, the Declarant and the owner of the property described in **Exhibit A**, applies to the Wire Road Subdivision, as shown on the Plats and Plans approved by the Wells Planning Board, dated _____, and recorded in the York County Registry of Deeds at Book ____, page ____, and to any amendments thereto.

This Declaration shall encumber the title to such Property, shall govern the development and use of such property, and shall be binding upon the Declarant and the future owners of any portion of such property, their respective heirs, successors, successors-in-title, and assigns, and any other person or entity that now or hereafter occupies or holds any legal, equitable, or beneficial interest in any portion of such property. Generally, reference in this document to the "Association" is a reference to the Wire Road Association unless the context dictates otherwise.

1.2. Reserved.

1.3. Conflicts and Ambiguities.

If there are conflicts between this Association's Articles of Incorporation, the Declaration, the Bylaws of the Wire Road Association (the "Association") or any Rules (the "Governing Documents") and Maine law or local ordinance shall control, to the extent it is mandatory. If there are conflicts between or among any of the documents, then the Articles of Incorporation, the Declaration, the Bylaws and the Rules (in that order) shall control.

If any court determines that any provision of this Declaration is invalid, or invalid as applied in a particular instance, such determination shall not affect the validity of other provisions or applications of such provision in other instances.

The Association's board of directors ("Board of Directors" or "Board ") may, by resolution, resolve any ambiguities in the Governing Documents, and the Board's reasonable interpretation of an ambiguous provision shall be determinative.

Deleted: , Maine law

Deleted: above named

1.4. Definitions.

Capitalized terms used in this Declaration have the meaning described in the paragraph where they first appear. All other terms have their usual, commonly accepted definitions.

For convenience, some terms are defined here:

"Common Area" is all the real estate shown on the Plan which is not within Lot boundaries, as shown on the Plan. It includes Open Space and other areas,

"Declarant Affiliate" is any Person that controls, is controlled by, or is under common control with the Declarant, and any Person that is an owner, a member, a partner, or a shareholder of the Declarant.

"Declarant Control Period" is the period of time that the Declarant is entitled to appoint the members of the Association's board of directors. It begins on the date the Declaration is recorded and terminates upon the first of the following to occur:

(a) when the Declarant has conveyed 75% of the total of lots approved for the Property by the Wells Planning Board to Persons other than a Declarant Affiliate;

(b) the maximum period permitted by Maine law; or

(c) when, in its discretion, the Declarant voluntarily and expressly surrenders such right in a recorded instrument.

"Development and Sale Period" is the period of time during which the Declarant, any "Declarant Affiliate," or any Builder owns real property in the community primarily for development or sale or has an unexpired option to expand the community pursuant to Article 16.

"Governing Documents" means the various documents, with plans, described in Section 1.3.

"Lot"." "Lot" refers to a parcel of land where a single dwelling unit may be place, according to an approved subdivision plan recorded in the York County Registry of Deeds.

"Plan" refers to the set of subdivision plans for development of the Property approved by the Wells Planning Board and shown on plans recorded at Plan Book _____, page _____ in the York County Registry of Deeds, as the Plans may be amended from time to time.

"Open Space" area refers to a portion of the Common Area which is set aside, dedicated, or reserved for public or private use or enjoyment, protection of natural or historic features, protection of abutting property owners, or to provide areas suitable for active or passive recreation, as approved by the Planning Board.

"Owner" refers to the owners of subdivision lots shown on the Plan. All Owners are also Members of the Association.

Deleted: those

Deleted: described in Section 9.3. It specifically excludes the Lots

Deleted: 2

Deleted: plan

Deleted: a plan

Deleted: it

Article 2. Reserved.

Article 3. Reserved.

Article 4. Association Membership and Voting Rights.

4.1. Membership Classes.

The Association initially has two classes of membership, “A” Class, the Owner membership, which is comprised of all Owners, including Builders and the Declarant, if it is an Owner, and “B” Class, which consists solely of the Declarant. All persons holding a membership in the Association are referred to in this Declaration as "Members."

a. Owner Membership. Every Owner is automatically a Member of the Association. However, there shall be only one membership per Lot. Thus, if a Lot has more than one Owner, all co-Owners of the Lot share the privileges of such membership, subject to reasonable Board regulation and the restrictions on voting set forth below and in the Bylaws. If an Owner is a corporation, a partnership, or other legal entity, its membership rights may be exercised by any officer, director, partner, or trustee, or by an individual the Owner designates from time to time in a writing to the Association's Secretary, except that only the individuals residing in the Lot may use any Common Area recreational facilities available for use by Owners.

b. Declarant Membership. The Declarant holds the sole Declarant membership, designated as Class “B.”. The Declarant membership shall be temporarily suspended during any period that the Declarant does not own a Lot, subject to automatic reinstatement upon Declarants acquisition of any Lot or expansion of the Community pursuant to Section 16.1; however, such temporary suspension shall not suspend, terminate, or otherwise affect the Declarant Control Period or any other rights reserved to the Declarant hereunder. The Declarant membership shall terminate upon expiration of the Declarant Control Period, or on such earlier date as the Declarant determines and declares in a recorded instrument.

4.2. Voting.

Each Lot is assigned one equal vote, subject to the limitations on voting set forth in this Declaration and the other Governing Documents. No vote shall be exercised for any property exempt from assessment under Section 12.8.

If there is more than one Owner of a Lot, its vote shall be exercised as the co-owners holding a majority of the ownership interest determine among themselves. Any co-Owner may cast the vote for the Lot or consent to any action requiring approval of the Owners on behalf of all co- Owners, and majority agreement shall be conclusively presumed unless another co-owner protests promptly to the President or other person presiding over the meeting or the balloting, in the case of a vote taken outside of a meeting. In the absence of majority agreement, the Lot’s vote shall be suspended if two or more co-Owners seek to exercise it independently. No more than one vote shall be cast for any Lot.

Article 5. Architecture, Landscaping and Aesthetic Standards.

5 .1. General.

All site work, landscaping, structures, improvements, and other items placed on a Lot or other area by anyone other than the Declarant or a Declarant Affiliate in a manner or location visible from outside of existing structures ("Improvements") are subject to standards for design, landscaping, and

aesthetics adopted pursuant to this Article ("Design Guidelines") and the approval procedures set forth in this Article, except as this Article or the Design Guidelines may otherwise specify.

No prior approval is necessary to repaint the exterior of existing structures using the most recently approved color scheme or to rebuild or restore any damaged structures in a manner consistent with the plans and specifications most recently approved for such structures. No approval is required for work done to the interior of a structure that is not visible from outside of the structure.

Any dwelling constructed on the Property shall be designed by and built in accordance with the plans and specifications of a licensed architect or professional building designer unless the Declarant or its designee otherwise approves, in its sole discretion.

Approval under this Article is not a substitute for any approvals or reviews required by the Town of Wells or any governmental agency or entity having jurisdiction over architectural or construction matters.

This Article shall not apply to structures existing on any portion of the Community prior to submitting it to this Declaration, or to the Declarant's or any Declarant Affiliate's design and construction activities, or to the Association's design and construction activities during the Declarant Control Period, except that the Declarant and Declarant Affiliates shall comply with the Design Guidelines.

5.2. Design Review Authority.

Declarant. The Declarant shall have exclusive authority to review and act upon all applications for review of proposed Improvements until the later of (i) the expiration of the Development and Sale Period, or (ii) such time as all Lots planned for the property have been improved with dwellings that are substantially complete and occupied or ready for occupancy or (iii) such time as the Declarant relinquishes such authority in writing. The Declarant may designate one or more persons to act on its behalf in reviewing any application. In reviewing and acting upon any request for approval, the Declarant and its designee act solely in the Declarant's interest and owe no duty to any other Person.

From time to time, the Declarant may delegate any or all of its rights under this Article to other Persons or committees. Any such delegation shall be in writing, shall specify the scope of responsibilities delegated, and shall be subject to (i) the Declarant’s right to revoke such delegation at any time and reassume its prior control, and (ii) the Declarant's right to veto any decision which it determines, in its discretion, to be inappropriate or inadvisable. So long as the Declarant has any rights under this Article, the jurisdiction of others shall be limited to such matters as the Declarant specifically delegates.

Design Review Committee. Upon the Declarant's delegation of authority, or upon expiration or termination of the Declarant's rights under this Article, the Board shall appoint a Design Review Committee ("Design Review Committee" or "DRC") to assume jurisdiction over matters within the scope of the delegated authority or this Article, respectively. The DRC shall consist of at least three, but not more than seven, persons, who shall serve and may be removed and replaced in the Board's discretion. DRC members need not be Owners or representatives of Owners. The DRC may, but need not, include architects, engineers, or similar professionals. The Association may compensate DRC members in such manner and amount, if any, as the Board may determine appropriate.

Until expiration of the Declarant's rights under this Article, the DRC shall notify the Declarant in writing within three business days of any action (i.e., approval, partial approval, or disapproval) it

takes under this Article. A copy of the application and any additional information the Declarant may require shall accompany the notice. The Declarant shall have 10 business days after receipt of such notice to veto any such action, in its sole discretion, by written notice to the DRC.

Unless and until such time as the Declarant delegates all or a portion of its reserved rights to the DRC or the Declarant's rights under this Article terminate, the Association shall have no jurisdiction over architectural matters.

Reviewer. For purposes of this Article, the entity having jurisdiction in a particular case shall be referred to as the "Reviewer."

Fees; Assistance. The Reviewer may establish and charge reasonable fees for its review of applications and may require that such fees be paid in advance. Such fees may also include reasonable costs incurred in having professionals review any application. The Board may include the compensation of such persons in the Association's annual operating budget.

5.3. Guidelines and Procedures.

Design Guidelines. The Declarant may prepare the initial Design Guidelines. The Design Guidelines are intended to provide guidance to Owners and contractors regarding matters of particular concern to the Reviewer. The Design Guidelines are not the exclusive basis for the Reviewer's decisions, and compliance with the Design Guidelines does not guarantee approval.

The Declarant shall have sole and full authority to amend the Design Guidelines for so long as it has review authority under Section 5.2(a). The Declarant's right to amend the Design Guidelines shall continue even if it delegates reviewing authority to the DRC, unless the Declarant also delegates the power to amend to the DRC. Upon termination or delegation of the Declarant's right to amend, the DRC may amend the Design Guidelines with the Board's consent.

Amendments to the Design Guidelines shall apply prospectively only. They shall not require modifications to or removal of any structures previously approved once the approved construction or modification has begun. However, any new work on such structures must comply with the Design Guidelines as amended. There shall be no limitation on the scope of amendments to the Design Guidelines, and such amendments may eliminate requirements previously imposed or otherwise make the Design Guidelines less restrictive. The Reviewer shall make the Design Guidelines, as they may be amended, available to Owners and their contractors upon request.

Procedures. Unless the Design Guidelines provide otherwise, no activities within the scope of this Article (as described in Section 5.1) may begin on any property within the Property until a written application is submitted to and approved by the Reviewer. The application must be accompanied by plans and specifications and such other information as the Reviewer or the Design Guidelines may require.

In reviewing each application, the Reviewer may consider any factors it deems relevant, including, without limitation, harmony of the proposed external design with surrounding structures and environment. Decisions may be based on purely aesthetic considerations. Each Owner acknowledges that such determinations are purely subjective and that opinions may vary as to the desirability and/or attractiveness of particular improvements.

The Reviewer shall have the sole discretion to make final, conclusive, and binding determinations on matters of aesthetic judgment so long as they are made in good faith and in accordance with required procedures.

The Reviewer shall make a determination on each application after receipt of a completed

application with all required information. The Reviewer may permit or require that an application be submitted or considered in stages, in which case a final decision shall not be required until after the final, required submission. The Reviewer may (i) approve the application with or without conditions; (ii) approve a portion of the application and disapprove other portions; or (iii) disapprove the application.

The Reviewer shall notify the applicant in writing of the final determination on any application no later than 30 business days after its receipt of a completed application and all required submissions; however, with respect to any DRC determination subject to the Declarant's veto right under Section 5.2(b), the Reviewer shall notify the applicant of the final determination within 40 business days after its receipt of the final determination and all required submissions. Notice shall be deemed given at the time the envelope containing the response is deposited in the U.S. mail. Hand delivery, facsimile, electronic mail, or similar delivery of such written notice also shall be sufficient and shall be deemed given at the time of confirmed delivery to the applicant.

If the Reviewer fails to respond within the time period required above, approval shall be deemed given. However, no approval, whether expressly granted or deemed granted, shall be inconsistent with the Design Guidelines unless a written variance has been granted pursuant to Section 5.5.

As part of any approval, the Reviewer may require that construction commence within a specified time period. If construction does not commence within the required period, the approval shall expire, and the Owner must reapply for approval before commencing any activities. Once construction is commenced, it shall be diligently pursued to completion. All work shall be completed within 12 months of commencement unless otherwise specified in the notice of approval or unless the Reviewer, in its discretion, grants an extension in writing.

The Reviewer may exempt certain activities from the application and approval requirements of this Article, if such activities are undertaken in compliance with the Design Guidelines.

Exercise of the review powers described in this Section shall not violate applicable laws relating to discrimination in housing.

5.4. No Waiver of Future Approvals.

The people reviewing applications under this Article will change from time to time, and opinions on aesthetic matters, as well as interpretation and application of the Design Guidelines, may vary accordingly. It may not always be possible to identify objectionable features until work is completed. In such cases, the Reviewer may elect not to require changes to objectionable features. However, the Reviewer may refuse to approve similar proposals in the future. Approval of applications or plans shall not constitute a waiver of the right to withhold approval as to any similar applications, plans, or other matters subsequently or additionally submitted for approval.

5.5. Variances.

The Reviewer may authorize variances from compliance with any of the Design Guidelines and any procedures when it determines that circumstances such as topography, natural obstructions, hardship, or aesthetic or environmental considerations justify a variance, but no variance shall (a) be effective unless in writing; (b) be contrary to this Declaration; or (c) prevent the Reviewer from denying a variance in other circumstances. A variance requires the Declarant's written consent during the Development and Sale Period and, thereafter, requires the Board's written consent.

5.6. Limitation of Liability.

This Article establishes standards and procedures as a mechanism for maintaining and enhancing the overall aesthetics of this Property; they do not create any duty to any Person. Review and approval of any application pursuant to this Article may be based purely on aesthetic considerations. The Reviewer is not responsible for the structural integrity or soundness of approved construction or modifications, for materials used, for compliance with building codes and other governmental requirements, or for ensuring that structures are fit for their intended purpose, or for ensuring that all dwellings are of comparable quality, value, size, or design, or are aesthetically pleasing or otherwise acceptable to other Owners. Neither the Reviewer nor any member of the DRC shall have any liability for approving plans that are inconsistent with the Design Guidelines provided that such person acted in good faith in approving such plans.

The Declarant, Declarant Affiliates, the Association, its officers, the Board, any committee, and any member of any of the foregoing, shall not be liable for (a) soil conditions, drainage, or other general site work; (b) any defects in plans revised or approved hereunder; (c) any loss or damage arising out of the action, inaction, integrity, financial condition, or quality of work of any contractor or its subcontractors, employees, or agents, whether or not the Declarant has approved or featured such contractor as a Builder; (d) view preservation; or (e) any injury, damages, or loss arising out of the manner or quality or other circumstances of approved construction on or modifications to any Unit. In all matters, the Association shall defend and indemnify the Board, the Reviewer, and the members of each, as provided in the Bylaws.

5.7. Certificate of Compliance.

Any Owner may request in writing that the Reviewer issue a certificate of compliance certifying that there are no known violations of this Article or the Design Guidelines. The Association shall either grant or deny such written request within 30 days after receipt and may charge a reasonable administrative fee. Issuance of such a certificate shall prevent the Association from taking enforcement action against an Owner for any condition known to the Association on the date of such certificate.

Article 6. Maintenance, Repair and Replacement.

6.1. Maintenance by Owners.

Unless otherwise provided in the Governing Documents, each Owner is responsible for maintenance, repair and replacement of his or her own dwelling and other structure and of the land constituting the Lot. Maintenance, repair and replacement responsibilities include all structures, landscaping, and other improvements, in a manner consistent with the Governing Documents, unless such maintenance responsibility is otherwise assumed by or assigned to the Association pursuant to this Declaration, any Supplement, or by law.

The Association may provide services to Lot owners, including the clearing of snow and ice from driveways, for a fee.

6.2. Maintenance by the Association

The Wire Road Association shall be established by the Declarant as a Maine non-profit corporation, and shall be the governing body for the Wire Road subdivision. Its responsibilities shall include:

a. Maintenance of the Open Space and other portions of the Property, except the Lots.
b. Maintenance and repair of the private roads within the subdivision
c. Provision for the clearing of snow and ice from the private roads within the subdivision.
d. Maintenance, repair and replacement of stormwater management systems as required by government authorities.

Article 7. Use, Conduct and Transfer of Interests in Lots.

7.1. Reserved.

7.2. Reserved.

7.3. Rulemaking Authority and Procedures.

(a) The initial Rules are attached as Exhibit "C." The Declarant and the Board are authorized to change the Rules in accordance with the following procedures, subject to the limitations set forth in Section 7.4.

(b) Declarant Authority. So long as the Declarant has the right unilaterally to amend this Declaration pursuant to Section 20.2, the Declarant may unilaterally amend Exhibit "C" to add new Rules or to modify or rescind existing Rules.

(c) Board Authority. Subject to the notice and veto provisions and the Board's duty to exercise judgment and reasonableness on behalf of the Association and its Members, the Board may adopt new Rules and modify or rescind existing Rules by majority vote of the directors at any Board meeting. However, during the Development and Sale Period, any such action shall also be subject to the Declarant's approval.

(d) Notice; Effective Date. Changes in the Rules adopted under this Section shall take effect 30 days after the date on which written notice of the Rules change is given to the Owners unless, within such 30-day period the Members petition the Board for a special meeting pursuant to the Bylaws and veto the pro-posed Rule change by a majority of the total votes represented in person or by proxy at such meeting, a quorum being present.

(e) Administrative and Operating Policies. The procedures set forth in this section do not apply to administrative and operating policies that the Board may adopt relating to the Common Areas, such as safety regulations or the method of allocating or reserving use of a facility (if permitted) by particular individuals at particular times, notwithstanding that such policies may be published as part

of the Rules.

(f) Conflicts. No action taken under this Section shall have the effect of modifying or repealing the Design Guidelines or any provision of this Declaration other than the Rules. In the event of a conflict between the Design Guidelines and the Rules, the Design Guidelines shall control. In the event of a conflict between the Rules and any provision of this Declaration (exclusive of the Rules), the Declaration shall control.

7.4. Protection of Owners and Others.

Except as may be set forth in this Declaration (either initially or by amendment) or in the initial Rules set forth in Exhibit "C," all Rules shall comply with the following provisions:

Similar Treatment. Similarly situated Lots shall be treated similarly.

Displays. No Rule shall prohibit an Owner or occupant from displaying political, religious, or holiday symbols and decorations on his or her Lot of the kinds normally displayed in single-family residential neighborhoods, nor shall any Rule regulate the content of political signs. However, the Association may adopt time, place, and manner restrictions with respect to signs, symbols, and displays visible from outside structures on the Lot, including reasonable limitations on size and number.

Household Composition. No Rule shall interfere with an Owner's freedom to determine house hold composition, except that the Association may impose and enforce reasonable occupancy limitations and conditions based on Lot size and facilities and its fair share use of the Common Area.

Activities within Dwellings. No Rule shall interfere with the activities carried on within a dwelling, except that the Association may prohibit activities not normally associated with residential property. It may also restrict or prohibit activities that create monetary costs for the Association or other Owners, that create a danger to anyone's health or safety, that generate excessive noise or traffic, that create unsightly conditions visible from outside the dwelling, or that are an unreasonable source of annoyance.

Allocation of Burdens and Benefits. No Rule shall alter the allocation of financial burdens among the various Lots or rights to use the Common Area set forth in this Declaration to the detriment of any Owner over that Owner's objection expressed in writing to the Association. Nothing in this provision shall prevent the Association from changing the Common Area available, from adopting generally applicable rules for use of Common Area, or from denying use privileges to those who are delinquent in paying assessments, abuse the Common Area, or violate the Governing Documents. This provision does not affect the right to increase the amount of assessments as provided in Article 12.

Leasing and Transfer of Lots. No Rule shall prohibit leasing or transfer of any Lot or require approval prior to leasing or transferring a Lot except as provided in Section 7 .6. The Rules may require that Owners use Board-approved lease forms (or include specific lease terms) and may impose a reasonable administrative fee in connection with the Board's review of a lease.

Abridging Existing Rights. No Rule shall require that an Owner or occupant dispose of personal property kept in or on the Lot in compliance with the Rules in effect at the time such personal property was brought onto the Lot. This exemption shall apply only during the period of such Owner's ownership of the Lot and shall not apply to subsequent Owners who take title to the Lot after adoption of the Rule.

Reasonable Rights to Develop. No Rule may unreasonably interfere with the ability of the Declarant, any Declarant Affiliate or Builder to develop, market, and sell property in Wire Road Subdivision.

Interference with Easements. No Rule may unreasonably interfere with the exercise of any easement.

7.5. Owners' Acknowledgment and Notice to Purchasers.

By accepting a deed, each Owner acknowledges and agrees that the use, enjoyment, and marketability of his or her Lot is limited and affected by the Rules, which may change from time to time. All Lot purchasers are hereby notified that the Association may have adopted changes to the Rules and that such changes may not be set forth in a recorded document. A copy of the current Rules and administrative policies are available from the Association upon request. The Association may charge a reasonable fee to cover its reproduction cost.

7.6. Residential and Related Uses Only.

Lots may be used only for residential and related purposes, except as the Declarant may otherwise authorize with respect to construction, marketing and sale activities of the Declarant and Builders it designates, and as otherwise authorized in this section. A business activity shall be considered "related" to a residential use and thus permitted under this Section only if conducted by a person or persons residing in the Lot and only if the business activity:

(a) is not apparent or detectable by sight, sound, or smell from outside of a permitted structure;

(b) complies with applicable zoning requirements;

(c) does not involve regular visitation of the Lot by employees who do not reside there, clients, customers, suppliers, or other business invitees, or door-to-door solicitation within the Community; and

(d) is consistent with the residential character of that portion of the Community in which the Lot is located and does not constitute a nuisance or a hazardous or offensive use, or threaten the security or safety of others, as the Board determines in its discretion.

"Business" shall have its ordinary, generally accepted meaning and shall include, without limitation, any occupation, work, or activity undertaken on an ongoing basis which involves providing goods or services to Persons other than the family of the producer and for which the producer receives a fee, compensation, or other form of consideration, regardless of whether (i) such activity is engaged in full or part time; (ii) such activity is intended to or does generate a profit; or (iii) a license is required.

Leasing a house on a Lot shall not be considered a "business" within the meaning of this Article.

7.7. Leasing.

Any dwelling that is leased shall be leased only in its entirety; separate rooms, floors, or other areas within a dwelling may not be separately leased.

All leases shall be in writing and shall disclose that the tenants and all occupants of the leased unit are bound by and obligated to comply with the Governing Documents. However, the Governing Documents shall apply regardless of whether such a provision is specifically set forth in the lease.

Deleted: Unit

Within 10 days of a lease being signed, the Owner of the leased Unit shall notify the Board or the Association's managing agent of the lease and provide any additional information the Board may reasonably require. The Owner must give the tenant copies of the Governing Documents. In addition to, but consistent with, this subsection, the Association or the Board may adopt Rules governing leasing and subleasing, including a requirement for a minimum lease period.

7.8. Transfer of Title; Governing Documents to new Owner.

Any Owner other than the Declarant desiring to sell or otherwise transfer title to his or her Lot shall provide, within a reasonable time to the Board, notice of the name and address of the purchaser or transferee, the date of such transfer of title, and such other information as the Board may reasonably require. The Person transferring title shall continue to be jointly and severally responsible with the Person accepting title for all obligations of the Owner, including assessment obligations, until the date upon which the Board receives such notice, notwithstanding the transfer of title.

Prior to the sale of any Lot by an Owner other than the Declarant, the selling Owner shall request from the Association and make available for inspection by the prospective purchaser, upon such purchaser's request, a copy of the Governing Documents and such other items as may be required by Maine law. The Association shall provide the requested documents within 30 days after receipt of the Owner's written request. The Association may charge the Owner a reasonable fee to cover its direct out-of-pocket cost of copying and providing the information.

7.9. Subdivision; Boundary Changes.

No Person shall subdivide or change the boundary lines of any Lot or combine them without the approval of the Wells Planning Board. During the Development and Sale Period, any such proposed change shall also require the written approval of the Declarant. After the Development and Sale Period, written approval shall also be obtained from the Board. Any change in the subdivision shall be effective only upon recording of a plat or other legal instrument reflecting the subdivision or new boundaries of the affected Lot(s).

Deleted: other than the Declarant

Deleted: , Declarant's prior written approval during

Deleted: the Board's prior

Deleted: thereafter.

Article 8. Compliance and Enforcement.

8.1. Compliance.

Every Owner, occupant, and visitor to a Lot must comply with the Governing Documents and shall be subject to sanctions for violations as described in this Article. In addition, each Owner shall be responsible for, and may be sanctioned for, all violations of the Governing Documents by the occupants of or visitors to their Lot and for any damage to the Common Area that such occupants or visitors cause.

8.2. Remedies requiring Opportunity to be Heard; Liens.

The Association, the Declarant, any Declarant Affiliate, and every affected Owner shall have the

right to file suit at law or in equity to enforce the Governing Documents. In addition, the Board may impose sanctions for violation of the Governing Documents, including those sanctions listed below and any others described elsewhere in the Governing Documents.

Sanctions Requiring Prior Notice and Hearing. After written notice and an opportunity to be heard in accordance with the Bylaws, the Board may, without liability to any Person:

(i) impose reasonable monetary fines, which shall constitute a lien upon the violator's Lot, as set forth more fully in Section 12.7. In the event that any occupant, guest, or invitee violates the Governing Documents and a fine is imposed, the fine may, but need not, first be assessed against the violator; however, if the fine is not paid by the violator within the time period set by the Board, the Owner shall pay the fine upon notice from the Board;

(ii) suspend an Owner's right to vote (except that no notice or hearing is required if the Owner is more than 60 days delinquent in paying any Base or Special Assessment, Other charges, service fees or consumption fees);

(iii) suspend any Person's right to use the Common Area facilities, if any, (A) for any period during which any charge against such Owner's Lot remains delinquent, and (B) for a period not to exceed 30 days for a single violation or for a longer period in the case of any continuing violation (except that no notice or hearing is required if the Owner is more than 60 days delinquent in paying any assessment or other charge owed the Association); however, nothing herein shall authorize the Board to limit ingress or egress to or from a Lot; .

(iv) suspend services the Association provides (except that no notice or hearing is required if the Owner is more than 60 days delinquent in paying any assessment or other charge owed to the Association);

(v) exercise self-help or take action to abate any violation of the Governing Documents in a non-emergency situation (including removing personal property that violates the Governing Documents);

(vi) preclude any contractor, subcontractor, agent, employee, or other invitee of an Owner who fails to comply with the terms and provisions of Article 5 and the Design Guidelines from continuing or performing any further activities in Wire Road Subdivision;

(vii) levy Other Charges to cover costs the Association incurs in bringing a Lot into compliance with the requirements under the Governing Documents; and

(vii) record a notice of violation with respect to any Lot on which a violation exists.

If, after notice and an opportunity for a hearing, the violation continues or recurs within 12 months after the date of such notice, the Board may impose any of the above sanctions without further notice or opportunity for another hearing.

8.3. Remedies not Requiring Prior Notice.

The Board may take the following actions to obtain compliance with the Governing Documents without prior notice or a hearing and without liability to any Person:

(i) exercise self-help or take action to abate a violation in any situation which requires prompt action to avoid potential injury or damage or unreasonable inconvenience to other persons or their property (specifically including, but not limited to, the towing of vehicles that are in violation of parking rules and regulations);

(ii) exercise self-help or take action to abate a violation on the Common Area under any circumstances

(ii) require an Owner, at the Owner's expense, to perform maintenance or to remove any

structure or improvement on such Owner's Lot that is in violation of the requirements under the Governing Documents and to restore the property to its previous condition;

(iv) enter the property and exercise self-help to remove or cure a violating condition if an Owner fails to take action as required pursuant to subsection (iii) above within 10 days after receipt of written notice to do so, and any such entry shall not be deemed a trespass; or

(v) bring suit at law for monetary damages or in equity to stop or prevent any violation, or both;

Action for Possession. If an Owner is delinquent in paying any assessment or other charges due to the Association under this Declaration, the Association may institute an action for possession of the Lot as provided for in Maine law.

8.4. Board Decision to Pursue Enforcement Action.

The Board may determine whether to take enforcement action by exercising the association's power to impose sanctions or commence an action for a violation of the declaration, bylaws, and rules, including whether to compromise any claim for unpaid assessments or other claim made by or against it. The Board does not have a duty to take enforcement action if it determines that, under the facts and circumstances presented:

(1) the association's legal position does not justify taking any or further enforcement action;

(2) the covenant, restriction, or rule being enforced is, or is likely to be construed as, inconsistent with law;

(3) although a violation may exist or may have occurred, it is not so material as to be objectionable to a reasonable person or to justify expending the association's resources; or

(4) it is not in the association's best interests to pursue an enforcement action.

The Board's decision not to pursue enforcement under one set of circumstances does not prevent the Board from taking enforcement action under another set of circumstances, but the Board may not be arbitrary or capricious in taking enforcement action.

8.5. Attorney's Fees and Costs.

In any action to enforce the Governing Documents, if the Association prevails, it shall be entitled to recover all costs, including, without limitation, attorneys' fees and court costs reasonably incurred in such action.

8.6. Enforcement of Ordinances.

The Association, by contract or other agreement, may enforce applicable town ordinances and conditions of approval for the Wire Road Subdivision property. Violation of governmental requirements and conditions is also a violation of these covenants and subject an owner to the same penalties by the Association. See Article 13-A of this Declaration for more details.

Article 9. Property Management.

9.1. Acceptance and Control of Association Property.

Transfers and Conveyances by the Declarant. The Declarant may transfer all Property, including the access road, but excluding the Lots, to the Association or to the Town of Wells, subject to easement rights in favor of the Declarant for access to Declarant's other land and for utilities, and for public access, and any other reserved rights of the Declarant. Upon the Declarant's written request, the Association shall reconvey to the Declarant, or any Declarant Affiliate or Builder, any unimproved real property that the Declarant originally conveyed to the Association for no payment, to the extent conveyed in error or needed to make minor adjustments in property lines or accommodate changes in the Plan.

.

Deleted: will

Deleted: Conservation Commission

Deleted: as

Deleted: may determine

9.2. Management and Control.

The Association or the Town of Wells, upon transfer of title to the Common Area to it, is responsible for the Common Area, subject to any covenants set forth in the deed or other instrument transferring the property. They may enter into leases, licenses, or operating agreements with respect to portions of the Common Area, for payment or no payment, as deemed appropriate.

Deleted: [

Deleted: Conservation Commission],

Deleted: The Association or Wells Conservation Commission

Deleted: the it deems

9.3. Maintenance of Common Areas.

The deeded owner of the Common Areas shall maintain:

a. the Open Space, if conveyed to the Association
b. Other portions of the Common Area;
c. Landscaping and signage within public rights-of-way, if any, within Wire Road Subdivision, landscaping within public rights-of-way adjacent to Wire Road Subdivision, to the extent that the Board determines it necessary or desirable to do so, and landscaping and signage features at the entrances to the subdivision;
d. The stormwater management system based on standards and requirements of the Maine Department of Environmental Protection.
e. those other areas where maintenance responsibilities are required by governmental bodies, whether they otherwise are within the "Common Area" or "Open Space;"
f. such portions of any additional property as may be dictated by this Declaration, any Supplement, or any covenant or agreement for maintenance entered into by, or otherwise binding on, the Association

This Section 9.3 may not be amended to reduce or eliminate any Association's obligation to maintain, repair or replace as required by governmental requirements, including the Wells Planning Board or the Maine Department of Environmental Protection, without the written approval of such agency.

Deleted: The Association [or Conservation Commission]

Deleted: ";

9.4. Discontinuation of Operation.

To the extent that the Association has title to the Common Areas, it shall maintain it, unless the

Declarant, during the Development and Sale Period, and Members entitled to cast 75% of the total votes in the Association, and the Wells Planning Board and Maine Department of Environmental Protection, if applicable, consent in writing to discontinue such operation. This Section shall not apply to restrict the Board's ability to restrict temporary closures or interruptions in operation as the Board may determine appropriate to perform maintenance or repairs.

Article 10. Provision of Services.

10.1. Provision of Services to Lots.

The Association may arrange for or provide services to Owners and their Lots, directly or through contracts with the Declarant or other third parties. The Association may enter into bulk service agreements by which a particular service is provided to all Lots, or it may offer various services at the option of each Owner, or both. It may charge owners individually for each such service, provide them as a common expense or charge individual owners for some and provide others as a common expense, in its discretion. By way of example and not limitation, such services might include such things as cable television, community technology, utilities, security, trash collection, and landscape maintenance. The Association may also require mailboxes to be congregated in one or more central areas in compliance with municipal approvals and set standards for their design, installation and maintenance.

Any Association contract for services may require individual Owners or occupants to execute separate agreements directly with the Persons providing components or services in order to gain access to or obtain specified services. Such contracts and agreements may contain terms and conditions that, if violated by the Owner or occupant of a Lot, may result in termination of services provided to such Lot. Any such termination shall not relieve the Owner of the continuing obligation to pay assessments for any portion of the charges for such service that are assessed against the Lot as a Common Expense pursuant to Article 12.

In its discretion, the Board may discontinue offering particular services and may modify or cancel existing contracts for services, subject to the contract terms and any provision that may exist elsewhere in the Governing Documents requiring the Association to provide such services.

10.2. Water Supply.

Water supply for each lot will be supplied by private wells. No well shall be installed without the prior written consent of the Declarant.

10.3. Community sewer.

The Declarant will construct and the Association will maintain, repair and replace community sewer systems according to the Plan, the conditions of approval by the Wells Planning Board and other State agencies having jurisdiction. Charges for the operation, repair, maintenance and replacement of these facilities is authorized under Section 12.5 of this Declaration.

Article 11. Association Insurance.

11.1. Required Coverages.

The Association shall obtain and maintain in effect Blanket property insurance covering "all risks of direct physical loss" on a replacement cost basis (or comparable coverage by whatever name denominated) for all insurable improvements on any Common Area it owns, together with commercial general liability insurance, insuring the Association and its Members for property damage or personal injury caused by the negligence of the Association or any of its Members, employees, agents, or contractors while acting on its behalf. If generally available at reasonable cost, such coverage shall have a limit of at least $1,000,000.00 per occurrence with respect to bodily injury, personal injury, and property damage;

(c) Workers compensation insurance and employer's liability insurance, if and to the extent required by law;

(d) Directors and officer's liability coverage with a limit of at least $1,000,000.00;

(e) Contractual liability or similar coverage to fund the Association's obligations to indemnify others under this Declaration, the Bylaws, and any agreements the Association may enter into from time to time; and

(f) Commercial crime insurance, including fidelity insurance covering all Persons responsible for handling Association funds in an amount determined in the Board's business judgment but not less than an amount equal to one-fourth of the annual Base Assessments (as defined in Section 12.3) on all Lots, plus reserves on hand. Fidelity insurance policies shall contain a waiver of all defenses based upon the exclusion of Persons serving without compensation.

The Association shall arrange for periodic reviews of the sufficiency of its insurance coverage by one or more qualified Persons, at least one of whom must be familiar with insurable replacement costs in the York County, Maine area. In the exercise of its business judgment, the Board may obtain additional insurance coverage and higher limits than this Section requires.

Deleted: employers

Deleted: officers

11.2. Deductibles.

The Association's policies may contain a reasonable deductible, which shall not be subtracted from the face amount of the policy in determining whether the policy limits satisfy the requirements of Section 11.1. In the event of an insured loss, the deductible shall be treated as a Common Expense in the same manner as the premiums for the applicable insurance coverage under Section 11.4. However, if the Board reasonably determines, after notice and an opportunity to be heard in accordance with the Bylaws, that the loss is the result of the negligence or willful misconduct of one or more Owners, their guests, invitees, or lessees, then the Board may assess the full amount of such deductible against such Owner(s) and their Lots.

11.3. Policy Requirements.

All Association policies shall provide for a certificate of insurance to be furnished to the Association and, upon request, to each Owner.

To the extent available at reasonable cost and terms, all Association insurance shall:

(a) be written with a company authorized to do business in Maine which satisfies the requirements of the Federal National Mortgage Association, or such other secondary mortgage market agencies or federal agencies as the Board deems appropriate;

(b) be written in the name of the Association as trustee for the benefited parties. All policies shall be for the benefit of the Association and its members;

(c) not be brought into contribution with insurance purchased by Owners, occupants, or their Mortgagees individually;

(d) contain an inflation guard endorsement, if reasonably available;

(e) include a co-insurance waiver or an agreed amount endorsement, if the policy contains a co-insurance clause;

(f) provide that each Owner is an insured person with respect to liability arising out of such Owner's status as a member of the Association;

(g) provide a waiver of subrogation against any Owner or household member of an Owner; and

(h) include an endorsement precluding cancellation, invalidation, suspension, or non-renewal by the insurer on account of any act or omission of one or more Owners, unless acting on the Association's behalf within the scope of their authority, or on account of any curable defect or violation, without prior written demand to the Association and allowance of a reasonable time to cure the defect or violation.

In addition, the Board shall use reasonable efforts to secure insurance policies that provide:

(a) a waiver of subrogation as to any claims against the Association's directors, officers, employees, and manager;

(Subrogation is a legal concept by which one person is substituted in the place of another with respect to a lawful claim or right. For example, once they have paid a claim by an insured party, insurance companies generally have the right to step into the shoes of the insured party and sue anyone that the insured party could have sued.)

(b) a waiver of the insurer's right to repair and reconstruct instead of paying cash;

(c) an endorsement requiring at least 30 days' prior written notice to the Association of any cancellation, substantial modification or non-renewal;

Deleted: ,

(d) a cross liability provision; and

(e) a provision vesting in the Board exclusive authority to adjust losses. However, Mortgagees having an interest in such losses may not be precluded from participating in the settlement negotiations, if any, related to the loss.

11.4. Insurance Premiums.

Premiums for all Association insurance shall be a Common Expense as defined in Section 12.1, unless the Board reasonably determines that other treatment of the premiums is more appropriate, and premiums for insurance on a Lot which the Association purchases upon the Owner's failure to do so pursuant to Section 6.2 shall be levied as an Other Charge pursuant to Section 12.4.

Article 12. Association Finances.

12.1. Association Expenses.

Association assessments consist of the following:

(a) Base assessments, consisting of common charges assessed equally against each Lot, contained in an annual or supplemental budget.

(b) Special Assessments, to pay for common charges unanticipated in the annual budget, assessed equally against each Lot;

(c) Other Charges, Service Fees, Use and Consumption Fees, assessed for the purposes set out in Section 12.5.

Except as this Article and other provisions of the Governing Documents otherwise specifically provide, all expenses incurred by the Association in connection with the ownership, maintenance, improvement, and operation of the Common Area and the other responsibilities set out in this Declaration, and otherwise for the general benefit of the Owners, are considered "Common Expenses." Common Expenses include such operating reserves and reserves for repair and replacement of any capital items for which the Association has responsibility, as the Board finds necessary or appropriate in accordance with this Declaration.

Expenses associated with the provision of common sewer from community septic systems on the Property, shall be assessed against all Lots, whether or not they connected to the community septic system.

Common Expenses shall not include any expenses incurred during the Declarant Control Period for initial development or original construction costs unless Owners entitled to cast a majority of the total votes in the Association approve such expenditure.

The characterization of a particular expense as a "Common Expense" shall not preclude the Association from seeking reimbursement for, or a contribution toward, such expenses from other Persons who may be responsible for the expenses incurred or for sharing such expenses pursuant to this Declaration, any Supplement, or any other recorded covenants or agreements.

The requirement in this Section 12.1 that the Common Expenses allocated to all Lots include the costs to maintain, repair, and replace the Common Area shall not be amended without the consent of the Town of Wells or the Maine Department of Environmental Protection.

12.2. Obligation to pay Assessments.

The Declarant hereby establishes and the Association is hereby authorized to levy assessments as provided for in this Article and elsewhere in the Governing Documents. Except with respect to Lots owned by the Declarant, the obligation to pay assessments shall commence as to each Lot on the first day of the month following the date on which the Lot is made subject to this Declaration or the effective date of the Association's first budget, whichever is later. The Base Assessment levied on each Lot for the year in which the Lot is made subject to this Declaration shall be prorated according to the number of months remaining in the fiscal year at the time the Lot becomes subject to the Declaration.

Assessments shall be paid in such manner and on such dates as the Board may establish. The Board may require advance payment of assessments at closing of the transfer of title to a Lot and impose special requirements for Owners with a history of delinquent payment. If the Board so elects, assessments may be paid in two or more installments. The Base Assessment is an annual assessment due and payable in advance on the first day of each fiscal year; however, the Board may permit such assessment to be paid in installments. If any Owner is delinquent in paying any assessments or other

charges levied on his Lot, the Board may revoke such Owner's privilege of paying in installments and require the outstanding balance on all assessments to be paid in full immediately.

Personal Obligation. By accepting a deed or entering into a recorded contract to purchase any Lot, each Owner covenants and agrees to pay all assessments authorized in the Governing Documents. All assessments, together with interest (computed from its due date at a rate of 18% per annum or such higher rate as the Board may establish, subject to the limitations of Maine law), late charges as determined by Board resolution, costs, and reasonable attorneys' fees, shall be the personal obligation of each Owner and a lien upon each Lot until paid in full. Upon a transfer of title to a Lot, the grantee shall be jointly and severally liable for any assessments and other charges due at the time of conveyance.

The Board's failure to fix assessment amounts or rates or to deliver or mail each Owner an assessment notice shall not be deemed a waiver, modification, or a release of any Owner from the obligation to pay assessments. In such event, each Owner shall continue to pay Base Assessments at the rate of assessment established for the last year for which an assessment was made, if any, until a new assessment is levied, at which time the Association may retroactively assess any shortfall.

No Owner may exempt himself or herself from liability for assessments by non-use of Common Area, abandonment of his or her Lot, or non-use of services provided to the Lots. The obligation to pay assessments is a separate and independent covenant on the part of each Owner. No diminution or abatement of assessments or set-off shall be claimed or allowed for any alleged failure of the Association or Board to take some action or perform some function required of it, or for inconvenience or discomfort arising from the making of repairs or improvements, or from any other action it takes.

12.2a. Annual Budget Development and Ratification.

Preparation of Budget. At least 60 days before the beginning of each fiscal year, the Board shall prepare a budget of the estimated Common Expenses for the coming year. The estimated expenses shall include, in addition to any operating reserves, a reasonable contribution to a reserve fund for repair and replacement of any capital items to be maintained as a Common Expense. In determining the amount of such reserve contribution, the Board shall take into account the number and nature of replaceable assets, the expected useful life of each, the expected repair or replacement cost, and the contribution required to fund the projected needs by annual contributions over the useful life of the asset.

The budget shall also reflect the sources and estimated amounts of funds to cover such expenses, which may include any surplus to be applied from prior years, any income expected from sources other than assessments levied against the Lots, and the amount to be generated through the levy of Base Assessments pursuant to Section 12.3.

Notice of Budget and Assessment; Right to Disapprove. Within 30 days after adoption by the Board of any budget, the Board shall send a summary of the proposed budget, together with notice of the amount of the Base Assessment to be levied pursuant to such budget, and the date of a meeting of the Owners to consider ratification of the budget to the Owner of each Lot responsible for a share of the expenses covered by such budget. The meeting of the Owners to consider the budget shall occur not less than 10 nor more than 60 days after mailing of the budget summary. The Common Expense budget shall automatically be adopted and become effective on the date stated in the notice unless disapproved at a meeting by Members entitled to cast at least 75% of the total

votes in the Association and by the Declarant, during the Development and Sale Period.

If any proposed budget is disapproved or the Board fails for any reason to determine the budget for any year, then the budget most recently in effect shall continue in effect until a new budget is ratified.

Budget Revisions. The Board may revise the budget and adjust the Base Assessment any time during the year, subject to the same notice requirements and rights to disapprove set forth in this Section.

Surplus Funds. Any surplus funds of the Association remaining after payment of or provision for all Association expenses and any budgeted allocation to reserves may be used to supplement reserves or taken into account in the income portion of the budget pursuant to which the funds were collected in order to reduce the assessments that would otherwise be levied pursuant to that budget in the succeeding year, as the Board deems appropriate.

12.3 Base Assessments.

Calculation of Base Assessments. The total budgeted Common Expenses, less any surplus in the Common Expense budget from prior years and any income anticipated from sources other than assessments against the Lots, shall be allocated among all Lots subject to assessment and levied as a "Base Assessment." Base Assessments shall be levied at a uniform rate per Lot subject to assessment under Section 12.5, except that Lots which the Declarant owns shall not be assessed any portion of the Base Assessment levied to fund contributions to reserve funds, and shall not be assessed at all during any period that the Declarant has elected to fund deficits pursuant to Section 12.6.

The Declarant may, but shall not: be obligated to, reduce the Base Assessment for any fiscal year by payment of a subsidy (in addition to any amounts paid by the Declarant under Section 12.6. Any such subsidy may be treated as a contribution, an advance against future assessments due from the Declarant, or a loan, in the Declarant's discretion. Any such subsidy and the characterization thereof shall be conspicuously disclosed as a line item in the income portion of the budget. Payment of such subsidy in any year shall not obligate the Declarant to continue payment of such subsidy in future years, unless otherwise provided in a written agreement between the Association and the Declarant.

12.4. Special Assessments.

The Association may levy "Special Assessments" to cover Common Expenses that are non-routine, unanticipated, or in excess of those anticipated in the applicable budget. Special assessments shall be payable in such manner and at such times as the Board determines and may be payable in installments extending beyond the fiscal year in which the Special Assessment is approved. Within 30 days after adoption of any special assessment, the board shall provide a summary to all the Lot owners, and shall set a date for a meeting of the Lot owners to consider ratification of the special assessment not less than 10 nor more than 30 days after mailing of the summary.

If the special assessment is to be paid entirely by Owners within the current budget year, it is ratified unless a majority of all the Owners reject it, whether or not a quorum is present.

If the special assessment is to be paid, in whole or in part, beyond the current budget year, it is not ratified unless a majority of all the Lot owners accept it.

Notwithstanding the above, if the amount of the special assessment does not exceed 2 months' common charges and the board determines that the assessment is necessary to meet an emergency, the board may make the special assessment immediately in accordance with the terms of the board's vote, without ratification by Lot owners.

Special Assessments shall be allocated equally among all such Lots.

During the Development and Sale Period, any special assessment shall also be subject to the Declarant's written consent.

12.5. Other Charges.

The term "Other Charge," or "Charge" may refer generally to service, use, consumption and other charges which are not levied generally against all Lots.

The Association may levy Other Charges against a particular Lot as follows:

(a) to cover the costs, including overhead and administrative costs, of providing services to the Lot upon request of the Owner pursuant to any menu of optional services which the Association may offer (which might include the items identified in Section 10.1). Other Charges for optional services may be levied in advance of the provision of the requested service;

(b) to cover the costs, including overhead and administrative costs, of providing other services to the Lot owner, as requested by such Owner;

(c) to cover costs which, in the opinion of the Board, and after notice and an opportunity to be heard, uniquely and significantly benefit one or more Lots;

(d) to cover costs incurred in bringing the Lot into compliance with the Governing Documents or costs incurred as a consequence of the conduct of the Owner or occupants, their agents, contractors, employees, licensees, invitees, or guests; however, the Board shall give the Owner prior written notice and an opportunity for a hearing in accordance with the Bylaws before levying any Other Charges under this subsection;

(e) to cover any deductible assessed against the Owners pursuant to Section 11.2; and

(f) to cover any other amounts that the Governing Documents authorize the Association to charge to a particular Owner or levy against any particular Lot.

(g) to provide sewer services from community sewer facilities, based on usage as the board may determine by a schedule of fees. These charges may be subcategorized into charges for capital expenditures, maintenance, consumption or other categories, and separately assessed under different formulas against Owners.

(h) other use, consumption, or activity fees to any Person using Association services or facilities. The Board may determine the amount and method of determining such fees. Different fees may be charged to different classes of users (e.g., Owners and non-Owners).

Deleted: ..

12.6. Declarant Financial Obligations to Association.

The Declarant shall be liable for assessments on any Lots it owns that are subject to assessment under this section, except that during the Development and Sale Period, the Declarant may satisfy its obligation to pay Base Assessments, and Special Assessments for Common Expenses on Lots it owns either (i) by paying such assessments (exclusive of any portion levied to fund contributions to reserve funds) in the same manner as any other Owner, or (ii) by paying any shortfall in actual expenses (excluding contributions to reserve funds) under the Common Expense budget resulting

from events other than failure of other Owners to pay their assessments, the amount of any such shortfall determined after allocating to reserves that portion of the assessments actually collected from other Owners for purposes of funding reserve accounts.

Regardless of the Declarant's election under this section, any of the Declarant's financial obligations to the Association may be satisfied in the form of cash or by "in kind" contributions of services or materials, or by a combination of these.

12.7. Lien for Assessments.

Existence of Lien. The Association shall have a lien against each Lot to secure payment of assessments, as well as interest, late charges (subject to the limitations of Maine law), and costs of collection (including attorney's fees and expenses). Such lien shall be superior to all other liens, except (i) liens and encumbrances recorded prior to this Declaration and which the Association has assumed or taken subject to; (ii) the liens of all real estate taxes and other governmental assessments or charges, and (iii) the lien or charge of any first mortgage made in good faith and for value having first priority over any other Mortgages on the Lot and recorded prior to the assessment becoming delinquent.

The Association may, as further evidence and notice of the lien, execute and record a document setting forth as to any Lot the amount of the delinquent sums due the Association at the time such document is executed and the fact that a lien exists to secure the repayment thereof. However, the failure of the Association to execute and record any such document shall not affect the validity, enforceability, or priority of the lien.

Enforcement of Lien. The Association may foreclose its lien in the same manner as a mortgage, bid for the Lot at the foreclosure sale and acquire, hold, lease, mortgage, and convey it, subject to the Owner's right of redemption, if any, under Maine law. While a Lot is owned by the Association following foreclosure: (i) no right to vote shall be exercised on its behalf; (ii) no assessment shall be levied on it; and (iii) each other Lot shall be charged, in addition to its usual assessment, its pro rata share of the assessment that would have been charged such Lot had it not been acquired by the Association. The Association may sue for unpaid assessments and other charges authorized hereunder without foreclosing or waiving the lien securing the same, in addition to pursuing any and all remedies allowed by law to enforce the lien.

Effect of Sale or Transfer. Sale or transfer of any Lot shall not affect the assessment lien or relieve such Lot from the lien for any subsequent assessments. However, the sale or transfer pursuant to foreclosure of a first Mortgage having priority over the Association's lien pursuant to Section 12.7(a) shall extinguish the lien as to any installments of such assessments due prior to the Mortgagee's foreclosure. The subsequent Owner shall not be personally liable for assessments due prior to such acquisition of title. Such unpaid assessments shall be deemed to be Common Expenses collectible from Owners of all Lots subject to assessment under Section 12.5, including such acquirer, its successors and assigns.

12.8. Exempt Property.

The following property shall be exempt from payment of Base Assessments and Special Assessments:

(a) All Common Area and such portions of the property owned by the Declarant or a Declarant

Affiliate; and

(b) Any property dedicated to and accepted by any governmental authority or public utility.

12.9. Capitalization of Association.

The first Owner of each Lot other than the Declarant, a Declarant Affiliate, or a Builder designated by the Declarant, shall pay to the Association, immediately upon taking title to the Lot:

(a) a Wire Road Subdivision community origination fee in the amount of $**500,** for use in funding initial start-up expenses, operating expenses, and other expenses the Association incurs pursuant to this Declaration and the Bylaws, or for helping to fund reserves, in the Board's discretion, plus

(b) a $100 contribution to a reserve fund for repairs and replacements.

These amounts shall be one-time payments in addition to, not in lieu of, the annual Base Assessment levied on the Lot and shall not be considered an advance payment of such assessments.

12.10. Resale Certificates.

Within 10 days after receipt of a written request from any Owner, Mortgagee, prospective Mortgagee, or prospective purchaser of a Lot, The Association shall deliver a Resale Certificate, containing substantially the same information required of Resale Certificates issued under Section 1604-108 of the Maine Condominium Act. A purchaser is not liable for any unpaid assessment or fee greater than the amount set forth in the certificate prepared by the association. The Association may require the payment of a reasonable processing fee for issuance of such statement. Such statement shall be binding upon the Association as to Persons who rely thereon in good faith.

Article 13. Easements; Restrictions.

13.1. Easements in Common Area.

The Declarant grants to each Owner a nonexclusive right and easement of use, access, and enjoyment in and to the Common Area, subject to:

(a) the Governing Documents and any other applicable covenants;

(b) any restrictions or limitations contained in any deed conveying such property to the Association;

(c) the Board's right to:

(i) adopt rules regulating Common Area use and enjoyment;

(ii)dedicate or transfer all or any part of the Common Area, subject to such approval requirements as may be set forth in this Declaration;

(d) the requirement of the Wells Planning Board that use of portions of the Common Area designated as Open Space be limited to passive recreation.

Any Owner may extend his or her right of use and enjoyment to the members of his or her family, lessees, and social invitees, as applicable, subject to reasonable Board regulation. An Owner who leases his or her Lot shall be deemed to have assigned all such rights to the lessee of such Lot for the period of the lease.

13.2. Easements of Encroachment.

The Declarant grants reciprocal appurtenant easements of encroachment, and for maintenance and use of any permitted encroachment, between each Lot and any adjacent Common Area and between adjacent Lots. A permitted encroachment is a structure or fixture that extends unintentionally from one person's property onto another's a distance of not more than one foot, as measured from any point on the common boundary along a line perpendicular to such boundary. An encroachment easement shall not exist if the encroachment results from willful and knowing conduct on the part of, or with the knowledge and consent of, the Person claiming the benefit of such easement.

13.3. Easements for Utilities, Etc.

(a) Installation and Maintenance. The Declarant reserves for itself, its successors, assigns, and designees, perpetual exclusive easements throughout Wire Road Subdivision (but not through a structure) for the purpose of:

(i) installing utilities and infrastructure, security and similar systems, and drainage systems to serve Wire Road Subdivision;

(ii) installing walkways, pathways and trails, streetlights, and signage on property the Declarant or the Association owns or within public rights-of-way or easements reserved for such purpose on a recorded plat;

(iii) inspecting, maintaining, repairing, and replace the utilities, infrastructure, and other improvements described above; and

(iv) access to read, maintain, and repair utility meters.

Notwithstanding the above, the Declarant reserves the right to deny access to any utility or service provider, to the extent permitted by law, and to condition such access on negotiated terms.

(b) Specific Easements. The Declarant also reserves the non-exclusive right and power to grant and record such specific easements, consistent with Section 13.3(a), as it deems necessary or appropriate to develop the property described in Exhibit "A". The location of the specific easement shall be subject to the written approval of the Owner of the burdened property, which approval shall not unreasonably be withheld, delayed, or conditioned.

(c) Minimal Interference. All work associated with the exercise of the easements described in subsections (a) and (b) of this Section shall be performed so as to minimize interference with the use and enjoyment of the property burdened by the easement. Upon completion of the work, the Person exercising the easement shall restore the property, to the extent reasonably possible, to the condition existing prior to the commencement of the work. The exercise of these easements shall not extend to permitting entry into the structures, nor shall it unreasonably interfere with its use and, except in an emergency, entry onto any Lot shall be made only after reasonable notice to the Owner or occupant.

Deleted: of

13.4. Easements to Serve Additional Property.

The Declarant reserves for itself and its duly authorized agents, successors, assigns, and Mortgagees, an easement over the road easements shown on Plans of the Property for the purposes

of enjoyment, use, access, and development of adjacent or nearby property. This easement includes, but is not limited to, a right of ingress and egress, for construction of roads and for connecting and installing utilities on such property. The Person exercising such easement rights shall be responsible for any damage caused to the Common Area as a result of their actions in connection with development of such property.

If the above easement grants permanent access to any property which is not submitted to this Declaration, the Declarant, or its successors or assigns, shall enter into a reasonable agreement with the Association to share the cost of maintenance that the Association provides for the benefit of the easement holder. The shared maintenance costs may include maintenance to or along any roadway providing access to the benefited property.

13.5. Easements for Maintenance, Emergency, and Enforcement.

The Association shall have the right, but not the obligation, to enter upon any Lot for emergency, security, and safety reasons, to perform maintenance, to inspect for compliance with the Governing Documents, and to enforce the Governing Documents. Any member of the Board and its duly authorized agents and assignees and all emergency personnel in the performance of their duties may exercise such right. Except in an emergency situation, entry shall only be during reasonable hours and after notice to the Owner.

13.6. Easements for Pond Maintenance and Flood Water.

The Declarant reserves for itself, the Association, and their successors, assigns, and designees, a perpetual, nonexclusive right and easement of access over the Common Area and Lots (but not the dwellings thereon) to the wet pond in order to perform maintenance and repair; remove dead or diseased trees, shrubs, and plants; and control any condition or remove any thing that constitutes a potential health or safety hazard. All persons entitled to exercise this easement shall use reasonable care in and repair any damage resulting from the intentional exercise of such easement. Nothing herein shall be construed to make the Declarant, the Association, or any other Person liable for damage resulting from flooding due to weather events or other natural occurrences.

13.6.1. Forested, No Disturbance Storm Buffer.

The area designated for forested, stormwater buffer on the Plans is restricted by a separate deed restriction.

13.7. Temporary Right and Easement for Service to Lots.

The Declarant reserves for itself, its agents, successors, and assigns, and any Builder whom the Declarant may designate, a temporary easement for access over and upon the front, side and rear yards of each Lot as the Declarant or Builder may determine necessary or convenient in the course of construction, landscaping, repair, and service to adjacent Lots.

The temporary right and easement under this Section shall terminate, as to each Lot, 60 days after expiration of the last to expire warranty period for the adjacent Lots, as established by the Builder's limited warranty provided to the original purchaser.

13.8. Easements for Dry Hydrants.

The Town of Wells is granted an easement for access to any dry hydrants built or to be built on the Premises.

13.9. Permanent Dedication of Open Space.

The Open Space portion of the Property is hereby permanently dedicated as Open Space, as that term is defined in the Wells Land Use Ordinance, whether owned by the Association or the Town of Wells. It shall be preserved in its natural condition except where approved to be altered, as shown on the Plans. Unless otherwise indicated on the Plans, use of the Open Space is limited to passive recreation.

Any change in the use of the Open Space requires approval of the Wells Planning Board.

13.10. Town Access over Roads and the Open Space.

The Town of Wells and its various departments shall have a permanent right of access over the private roads and Open Space to respond to emergencies and to perform other necessary functions of government.

Deleted: are given easements for

Article 13-A. Compliance with Governmental Approvals.

13-A.1. Compliance with Density Bonus Requirements.

Density bonus provisions of the Wells Land Use Code allow the Property to have more lots than would otherwise be allowed. Ch. 145-49D (1) of Wells Land Use Code provides that at least 50% of the total area of the Property shall consist of Open Space, as defined in the Wells Land Use Code, in perpetuity, as required by Chapter 202 12B of the Wells Land Use Code, as that term is used in Chapter 145-49 D (1) of the Code, and as depicted on the Plans recorded in the York County Registry of Deeds at Plan Book ____, page ____.

Accordingly, no construction, development or other activity which would reduce the total Open Space area to less than 50% shall be permitted.

Because the Wells Planning Board allowed density of dwelling units on the Property to be increased in reliance on these provisions, no amendment to Section 13-A.2 is valid without the written approval of the Wells Planning Board.

13-A. 2. Other Governmental Approvals and Permits.

The Property is subject to approvals and permits granted by the Army Corps of Engineers, and the Maine Department of Environmental Protections, as applicable and as they may be modified from time to time. Each Owner and the Association must comply with them. The permits and

approvals contain specific provisions and conditions. The Association has the affirmative duty of complying with them and to enforce compliance by others. These duties include, but are not limited to:

(a) maintenance and inspection of the Stormwater Management System, and periodic reports as required by the Inspection and Maintenance Plan.

(b) compliance with requirements and conditions of approval contained in Maine Department of Environmental Protection approvals or permits under the Maine Site Location of Development Act and the Natural Resources Protection Act.

(c) compliance with any approvals or permits by the Army Corps of Engineers applicable to the Property.

This Section 13-A.2 may not be amended without approval from the Maine Department of Environmental Protection or the Army Corps of Engineers, as the case may be.

Article 14. Disclosures and Waivers.

14.1. Changes in Plan.

Each Owner agrees that the Association shall not engage in, or use Association funds to support, any protest, challenge, or other form of objection to changes in uses or density of property within Wire Road Subdivision, or changes in the Plan as it relates to property outside Wire Road Subdivision, without the Declarant's prior written consent.

Article 15. Rights of Lenders.

The following provisions are for the benefit of holders, insurers and guarantors of first Mortgages on Lots in Wire Road Subdivision.

15.1. Notices of Action.

An institutional holder, insurer, or guarantor of a first Mortgage which provides a written request to the Association (such request to state the name and address of such holder, insurer, or guarantor and the street address of the Lot to which its Mortgage relates, thereby becoming an "Eligible Holder"), will be entitled to timely written notice of:

(a) Any condemnation loss or any casualty loss which affects a material portion of Wire Road Subdivision or which affects any Lot on which there is a first Mortgage held, insured, or guaranteed by such Eligible Holder; and

(b) Any delinquency in the payment of assessments or charges owed by a Lot Owner subject to the Mortgage of such Eligible Holder, where such delinquency has continued for a period of 60 days, or any other violation of the Governing Documents relating to such Lot or the Owner or occupant which is not cured within 60 days; or

(c) Any lapse, cancellation, or material modification of any insurance policy maintained by the Association.

15.2. No Priority.

No provision of this Declaration or the Bylaws gives or shall be construed as giving any Owner or other party priority over any rights of the first Mortgagee of any Lot in the case of distribution to such Owner of insurance proceeds or condemnation awards for losses to or a taking of the Common Area.

15.3. Notice to Association.

Upon request, each Owner shall furnish to the Association the name and address of the holder of any Mortgage encumbering such Owner's Lot.

15.4. Failure of Mortgagee to Respond.

Any Mortgagee who receives a written request from the Board to respond to or consent to any action shall be deemed to have approved such action if the Association does not receive a written response from the Mortgagee within 30 days of the date of the Association's request, provided such request is delivered to the Mortgagee by certified or registered mail, return receipt requested.

Article 16. Reserved.

[The Declarant may or may not reserve the right to add adjacent property it owns to the provisions of this Declaration and will supply additional provisions in this section, if that is the case.]

Article 17. Additional Rights Reserved to the Declarant.

17.1. Special Development Rights.

Subject to requirements of governmental approvals and permits, including the Wells, Planning Board, the Declarant reserves the right, during the Development and Sale Period, to:

(a) create Lots, Common Areas, and to designate roadways, within any portion of the Community which it owns;

(b) subdivide or combine any Lots which it owns in order to create larger or additional Lots, or Common Areas;

(c) convert any Lot which it owns into Common Area or roadways;

(d) adjust the boundaries of any Lots that it owns and any Common Area (with the approval of the Wells Planning Board); and

(e) amend this Declaration or any Supplement to withdraw property from the community and the coverage of this Declaration, provided that such property has not been improved with a dwelling.

Any such amendment shall not require the consent of any Person other than the Owner(s) of the property to be withdrawn, if not the Declarant. If the property is Common Area, the Association shall consent to such withdrawal.

17.2. Marketing and Sales Activities.

Notwithstanding anything in the Governing Documents to the contrary, during the Development and Sale Period, the Declarant and its designees or assigns may construct, use, and maintain such facilities and conduct such activities upon portions of the Common Area and other property they own as, in the Declarant's opinion, may reasonably be required, convenient, or incidental to the construction or sale of Lots. Such permitted facilities and activities shall include business offices, signs, flags (whether hung from flag poles or attached to a structure), model homes, sales offices, parking facilities, exterior lighting features or displays, and special events. Declarant and authorized Builders whom the Declarant may designate shall have easements for access to and use of such facilities at no charge.

17.3. Access for Development Purposes.

During the Development and Sale Period, the Declarant and its employees, agents, and designees shall have a right of access and use and an easement over and upon all of the Common Area and roadways within the Community for the purpose of:

(a) exercising any rights reserved to the Declarant pursuant to this Declaration, including the rights set forth in Sections 17.I and 17.2; and

(b) making, constructing, and installing any improvements indicated on recorded subdivision maps or plats of the Community and such other improvements to the Common Area and to the Exhibit "A-1" property as it deems appropriate; and

(c) making repairs or correcting any condition on the Common Area or any Lot or dwelling.

17.4. Right to Approve Changes in Community Standards.

During the Development and Sale Period, no amendment to or modification of any Rules or Design Guidelines shall be effective without prior notice to and the written approval of the Declarant.

17.5. Additional Covenants and Restrictions.

During the Development and Sale Period, no one other than the Declarant or a Declarant Affiliate may record any additional covenants or restrictions affecting any portion of the Community without the Declarant's written consent. Any instrument recorded without the required consent shall be void and of no force and effect.

17.6. Reserved.

17.7. Community Systems.

The Declarant reserves for itself, Declarant Affiliates, and their respective successors and assigns, a perpetual right and easement over all of the property in Wire Road Subdivision to install and operate such community systems (except community sewer systems) as the Declarant, in its discretion, deems appropriate to serve any portion of the community. Such right shall include, without limitation, the Declarant's right to select and contract with companies licensed to provide telecommunications, cable television, and other Community Systems services in the area. The Declarant also has the right to charge or authorize any provider to charge individual users a reasonable fee, not to exceed the maximum allowable charge for such service, as defined from time to time by the laws, rules, and regulations of any government authority having jurisdiction.

Notwithstanding the above, there is no guarantee or representation that any particular community system will be made available.

17.8. Easement to Inspect and Right to Correct.

The Declarant reserves for itself, Builders, and others it may designate, the right, but not the obligation, to inspect, monitor, test, redesign, and correct any structure, improvement, or condition which may exist on any portion of the property within Wire Road Subdivision, and to perform any work that may be required by any governmental agency or body, and a perpetual nonexclusive easement of access throughout Wire Road Subdivision to the extent reasonably necessary to exercise such right. Except in an emergency, entry shall be only after reasonable notice to the Owner, and no entry into an enclosed structure shall be permitted without the Owner's consent. The person exercising this easement shall promptly repair, at such person's own expense, any damage he or she causes. Nothing in this paragraph shall relieve an Owner of the responsibility for the maintenance and repair of his or her Lot or dwelling unit.

The Declarant, or someone it designates, may enter any Owner's property to inspect and correct problems with the Lot or dwelling unit. The Declarant must give the Owner prior notice, unless it is an emergency.

17.9. Right to Notice of Design or Construction Claims.

No Person shall retain an expert for the purpose of inspecting the design or construction of any structures or improvements within Wire Road Subdivision in connection with or in anticipation of any potential or pending claim, demand, or litigation involving such design or construction unless the Declarant and any Builder involved in the design or construction have been first notified in writing and given an opportunity to meet with the owner of the property to discuss the owner's concerns and conduct their own inspection.

17.10. Right to Transfer or Assign the Declarant's Rights.

The Declarant may transfer any or all of the Declarant's special rights and obligations set forth in this Declaration or the Bylaws in whole or in part, temporarily or permanently, to other Persons. However, such a transfer shall not reduce an obligation or enlarge a right beyond that which Declarant has under this Declaration or the Bylaws. Any transferee shall be subject to the provisions of this Declaration. No transfer or assignment of the Declarant's status as the Declarant or as the

Declarant member shall be effective unless it is in a recorded instrument which the Declarant has signed. The Declarant may permit other Persons to exercise, on a one-time or limited basis, any right reserved to the Declarant in this Declaration where the Declarant does not intend to transfer such right in its entirety. In such case, it shall not be necessary to record any written assignment unless desired to evidence the Declarant's consent to such exercise.

17.11. Termination of Rights.

Except as otherwise specified above, the rights reserved to the Declarant in this Article shall terminate on the earlier of (a) termination of the Development and Sale Period; or (b) the Declarant's recording of a written statement that all sales activity has ceased.

Article 18. Dispute Resolution and Limitation on Litigation.

18.1. Agreement to Encourage Resolution of Disputes Without Litigation.

Bound Parties. The Declarant, the Association and its officers, directors, and committee members, all Owners and other Persons subject to this Declaration, and any Person not otherwise subject to this Declaration who agrees to submit to this Article (collectively, ''Bound Parties"), agree that it is in the best interest of all concerned to encourage the amicable resolution of disputes involving the community without the emotional and financial costs of litigation. Accordingly, each Bound Party agrees not to file suit in any court with respect to a Claim described in subsection (b), unless and until it has first submitted such Claim to the alternative dispute resolution procedures set forth in Section 18.2 in a good faith effort to resolve such Claim.

Claims. As used in this Article, the term "Claim" shall refer to any claim, grievance, or dispute arising out of or relating to:

(a) the interpretation, application, or enforcement of the Governing Documents;

(b) the rights, obligations, and duties of any Bound Party under the Governing Documents; or

(c) the design or construction of improvements within the Community, other than matters of aesthetic judgment under Article 5, which shall not be subject to review;

Notwithstanding the above, the following shall not be considered "Claims" unless all parties to the matter otherwise agree to submit the matter to the procedures set forth in Section 18.2:

(a) any suit by the Association to collect assessments or other amounts due from any Owner;

(b) any suit by the Association to obtain a temporary restraining order (or emergency equitable relief) and such ancillary relief as the court may deem necessary in order to maintain the status quo and preserve the Association's ability to enforce the provisions of this Declaration relating to creation and maintenance of community standards;

(c) any suit that does not include the Declarant, a Declarant Affiliate, or the Association as a party, if such suit asserts a Claim that would constitute a cause of action independent of the Governing Documents;

(d) any dispute which affects the material rights or obligations of a party who is not a Bound Party and has not agreed, and does not agree, to submit to the procedures set forth in Section 18.2;

(e) any suit as to which any applicable statute of limitations would expire within 180 days of giving the Notice required by Section 18.2, unless the party or parties against whom the Claim is made agree to toll, or extend, the Claim's statute of limitations to comply with this Article; and

(f) any suit by the Association to enforce the Governing Documents where the Association has given the violator notice and either a hearing or an opportunity to cure the violation, or both, prior to the Association filing suit.

18.2. Dispute Resolution Procedures.

Notice. The Bound Party asserting a Claim ("Claimant") against another Bound Party ("Respondent") shall give written notice (''Notice") by mail or personal delivery to each Respondent and to the Board, stating plainly and concisely:

the Claimant's desire to meet with the Respondent to discuss, in good faith, ways to resolve the Claim.

Negotiation. The Claimant and Respondent shall make every reasonable effort to meet in person and confer for the purpose of resolving the Claim by good faith negotiation. If requested in writing, accompanied by a copy of the Notice, the Board may appoint a representative to assist the parties in negotiating a resolution of the Claim.

Mediation. If the parties have not resolved the Claim through negotiation within 30 days of the date of the Notice (or within such other agreed upon period), the Claimant shall have 30 additional days to submit the Claim to mediation with an entity designated by the Association (if the Association is not a party to the Claim) or to an independent agency providing dispute resolution services in the vicinity of York County, Maine. Each Bound Party shall present the mediator with a written summary of the Claim.

If the Claimant does not submit the Claim to mediation within such time, or does not appear for and participate in good faith in the mediation when scheduled, the Claimant shall be deemed to have waived the Claim, and the Respondent shall be relieved of any and all liability to the Claimant (but not third par- ties) on account of such Claim.

If the parties do not settle the Claim within 30 days after submission of the matter to mediation, or within such time as determined reasonable by the mediator, the mediator shall issue a notice of termination of the mediation proceedings indicating that the parties are at an impasse and the date that mediation was terminated. The Claimant shall thereafter be entitled to file suit or to initiate administrative proceedings on the Claim, as appropriate, except as otherwise provided in Section 18.3.

Each Bound Party shall bear its own costs of the mediation, including attorneys' fees, and each Party shall pay an equal share of the mediator's fees.

Settlement. Any settlement of the Claim through negotiation or mediation shall be documented in writing and signed by the parties. If any party thereafter fails to abide by the terms of such agreement, then any other party may file suit or initiate administrative proceedings to enforce such agreement without the need to comply again with the procedures set forth in this Section. In such event, the party taking action to enforce the agreement or award shall, upon prevailing, be entitled to recover from the noncomplying party (or if more than one non-complying party, from all such parties in equal proportions) all costs incurred in enforcing such agreement or award, including, without limitation, attorney’s fees and court costs.

18.3. Initiation of Litigation by Association.

Membership Approval. In addition to compliance with the foregoing alternative dispute

resolution procedures, if applicable, the Association shall not initiate any judicial or administrative proceeding unless first approved by a vote of Members entitled to cast at least 75% of the total votes in the Association, except that no such approval shall be required for actions or proceedings:

(a) initiated during the Declarant Control Period;

(b) initiated to enforce the provisions of the Governing Documents, including collection of assessments and foreclosure of liens;

(c) initiated to challenge ad Valorem taxation or condemnation proceedings;

(d) initiated against any contractor, vendor, or supplier of goods or services, other than the Declarant or a Builder, arising out of a contract for services or supplies; or

(d) to defend claims filed against the Association or to assert counterclaims in proceedings instituted against it.

This subsection (a) shall not be amended unless such amendment is approved by the same percentage of votes necessary to institute proceedings.

Mandatory and Binding Arbitration. Notwithstanding any other provision of this Declaration, any claim by the Association or any Owner or group of Owners arising out of alleged defects in the Common Areas or other portions of the Area which the Association is charged with maintaining, that is not resolved pursuant to the procedures set forth in by mediation shall be submitted to final and binding arbitration in accordance with this section. The Claimant shall have 30 days following termination of mediation pursuant to Section 18.2 to submit the claim to arbitration under the Uniform Arbitration Act, 14 M.R.S., Section 5927 et seq. or the claim shall be deemed abandoned and the respondent shall be released and discharged from any and all liability to Claimant arising out of such claim; however, nothing in this section shall release or discharge the Respondent from any liability to persons not a party to the foregoing proceedings. Unless the parties agree otherwise, there shall be one arbitrator. The arbitrator may grant any remedy or relief that the arbitrator considers just and equitable. The decision of the arbitrator shall be final, and judgment upon the arbitral award may be entered in any court having jurisdiction thereof.

Each Owner, by accepting a deed to a Lot, waives any right to have a claim within the scope of this section resolved by judicial proceedings, including any right to a trial by jury. This section is an agreement of the bound parties to arbitrate the claims described in this section and may be specifically enforced by any bound party.

If any party commences litigation in violation of this Section, then upon the other party's written objection, the party commencing litigation shall immediately stipulate to the dismissal of that litigation without prejudice. If the party commencing the litigation fails to make that stipulation within five days after the filing of such written objection, that party shall reimburse the other parties for their costs and expenses, including reasonable attorneys' fees, incurred in seeking a dismissal or stay of that litigation if such dis- missal or stay is obtained.

Good Faith; Fees. The parties shall participate in good faith in all mediation and arbitration proceedings. The venue of the mediation or arbitration proceeding shall be determined by the mediator or arbitrator, as the case may be. The fees and expenses of the mediation or arbitration proceeding (including the fee of the mediator and arbitrator) shall be shared equally by the parties. Each party shall pay its own expenses (including without limitation attorneys' fees and costs and expenses of preparation and presentation of proofs), except that the prevailing party in any arbitration proceeding shall be entitled to an award of reasonable attorneys' fees and costs.

Article 19. Changes in the Common Area.

19.1. Condemnation.

If any part of the Common Area is taken by any authority having the power of condemnation or eminent domain, or conveyed by the Association in lieu of and under threat of condemnation with such approval as may be required under Section 19.3, each Owner shall be entitled to written notice of such taking or conveyance prior to disbursement of any condemnation award or proceeds from such conveyance. Such award or proceeds shall be payable to the Association to be disbursed as follows:

If the taking or conveyance involves a portion of the Common Area on which improvements have been constructed, the Association shall restore or replace such improvements on the remaining land included in the Common Area to the extent available, unless within 60 days after such taking the Declarant, during the Development and Sale Period, and Members entitled to cast at least 75% of the total votes in the Association shall otherwise agree. Any such construction shall be in accordance with plans approved by the Board.

If the taking or conveyance does not involve any improvements on the Common Area, if a decision is made not to repair or restore, or if net funds remain after any such restoration or replacement is complete, then such award or net funds shall be treated in the same manner as proceeds from the sale of Common Area under Section 19.3.

19.2. Partition.

Except as permitted in this Declaration, the Common Area shall remain undivided, and no Person shall bring any action to partition any portion of the Common Area without the written consent of all Owners and Mortgagees. This Section shall not prohibit the Board from acquiring and disposing of tangible personal property or from acquiring and disposing of real property that may or may not be subject to this Declaration, with such approval as may be required under Section 19.3.

19.3. Transfer, Mortgaging or Dedication of Common Areas.

The Association may transfer or dedicate portions of the Common Area to the Town of Wells or any local, state or federal governmental or quasi-governmental entity, may subject Common Area to a security interest, or may transfer or convey Common Area, upon the written direction of Members entitled to cast at least 67% of the total votes in the Association, the written consent of the Wells Planning Board and any other governmental entities having jurisdiction and, during the Development and Sale Period, the written consent of the Declarant.

The proceeds of sale or mortgaging of Common Area shall be an asset of the Association to be used as the Board determines, unless otherwise directed by Members at the time such sale or mortgage is authorized pursuant to this Section.

No conveyance or encumbrance of Common Area may deprive any Lot of rights of access or support.

Article 20. Termination and Amendment of this Declaration.

20.1. Term and Termination.

This Declaration shall be effective for a minimum of 30 years from the date it is recorded. After 30 years, this Declaration shall be renewed and extended automatically for successive 20 year periods unless at least 67% of the then Owners sign a document stating that the Declaration is terminated, the document is recorded and the Wells Planning Board approved the termination within the year before any extension. In such case, this Declaration shall terminate on the date specified in the termination document.

Deleted: and that

If any provision of this Declaration would be unlawful, void, or voidable by reason of any rule restricting the period of time that covenants can affect title to property, that provision shall expire 21 years after the death of the last survivor of the now living descendants of Elizabeth II, Queen of England.

This section shall not permit termination of any easement created in this Declaration without the consent of the holder of such easement.

20.2. Amendment.

By the Declarant. In addition to the specific amendment rights granted elsewhere in this Declaration, during the Declarant Control Period, the Declarant may unilaterally amend this Declaration for any purpose.

By the Board. The Board may, by at least a two-thirds vote of the directors, amend this Declaration to correct any error or omission required to conform this Declaration to the applicable provisions of Maine law, provided that the amendment does not materially or adversely affect the property rights of any Owner without the written consent of the affected Owner.

By the Owners. Except as otherwise specifically provided above or elsewhere in this Declaration, this Declaration may be amended only by the affirmative vote or written consent of Members entitled to cast not less than 67% of the total votes in the Association. During the Development and Sale Period, the Declarant's written consent shall also be required.

Any amendment pursuant to this Section shall be prepared, executed, certified and recorded on behalf of the Association by any officer designated for such purpose or, in the absence of such designation, by the Association's President.

Validity and Effective Date. Notwithstanding the above, the percentage of votes necessary to amend a specific clause shall not be less than the prescribed percentage of affirmative votes required for action to be taken under that clause.

No amendment may remove, revoke, or modify any right or privilege of the Declarant or the Declarant Member without the written consent of the Declarant or the Declarant Member, respectively (or the assignee of such right or privilege).

If an Owner consents to any amendment to this Declaration or the Bylaws, it will be conclusively presumed that such Owner has the authority to consent, and no contrary provision in any Mortgage or contract between the Owner and a third party will affect the validity of such amendment.

Any amendment shall become effective upon recording unless a later effective date is specified in the amendment.

No action to challenge the validity of an amendment may be brought more than two years after its recordation. In no event shall a change of conditions or circumstances operate to amend any provisions of this Declaration.

Exhibits. Exhibits "A" and "A-1" are incorporated by this reference and this Article shall govern amendment of those exhibits. Exhibit "C" is attached for informational purposes only and may be amended as provided in **Article 7** or pursuant to Section 20.2.

In witness of the foregoing, the Declarant has executed this Declaration this_____ day of _____, 2016

Highpine Properties, LLC

By_____

STATE OF MAINE, _____, 2016
County of York, ss.

Then personally appeared the above-named _____, _____ of Highpine Properties, LLC, and acknowledged the foregoing instrument to be his free act and deed in his said capacity, before me,

_____
Notary Public, Attorney at Law

(For Notaries), My commission expires _____.

_____
PRINT NAME

Deleted: EXHIBIT A. LAND INITIALLY SUBMITTED TO THIS DECLARATION.¶
¶
[To be added]¶

Exhibit A

Land Submitted to this Declaration

Highpine Properties, LLC

A certain tract or parcel of land located on the southwesterly side of Wire Road in Wells, York County, Maine, more particularly bounded and described as follows:

Beginning on the southwesterly sideline of Wire Road at a 1 3/4" iron pin at the northwesterly corner of land now or formerly of John L. Welch and Peggy L. Gagne;

Thence running S 53°10'40" W by land of said Welch and Gagne and land now or formerly of Flintlock Village, Inc, a distance of 1,400.97 feet to a stone field bound and land now or formerly of Josephine Matthews;

Thence running S 52°58'56" W by land of said Matthews a distance of 841.42 feet to a stone bound and land of Highpine Properties, LLC;

Thence running N 34°48'24" W by land of Highpine Properties, through a ¼" by 1 ¼" iron bar, a distance of 868.24 feet to a field stone bound;

Thence running N 39°55'25" W by land of Highpine Properties, through two ¼" by 1 ¼" iron bars, a distance of 937.91 feet to a stone bound at land of Highpine Properties;

Thence running N 51°24' 26" E by land of Highpine Properties a distance of 580.45 feet to a field stone bound;

Thence running N 45°46'52" W by land of Highpine Properties a distance of 597.99 feet to a ¾" iron rod at land of Tina Cole;

Thence running N 52°36'36" E by land of said Cole, through two 5/8" iron rods with Wayne Desper ID caps, a distance of 1069.64 feet to a 5/8" iron rod with Civil Consultants ID;

Thence running S 46°22'26" E by land now or formerly of Daniel Fraser and Pamela Fraser, a distance of 300.13 feet to a 5/8" iron rod and land now or formerly of Warren P. Dewilt and Abigail L. Dewilt;

Thence running S 53°37'25" W by land of Dewilt a distance of 165.00 feet to an iron pin;

Thence running S 46°22'17" E by land of Dewilt a distance of 200.05 feet to an iron rod;

Thence running N 52°37'25" E by land of Dewilt a distance of 495.16 feet to an iron pin located at the southeasterly sideline of Wire Road;

Thence running S 46°16'23" E along the southerly sideline of Wire Road a distance of 60.73 feet to an iron pin and land now or formerly of Brian D. Loucks and Connie D. Loucks;

Thence running N 52°37'25 E by said Loucks a distance of 503.31 feet to a 5/8" iron rod with PRS ID cap;

Thence running S 46°16’23” E by land of said Loucks, a distance of 200.50 feet to a 5/8” iron rod with PRS ID cap;

Thence running N 52°37 25” E by land of Loucks, a distance of 505.31 feet to a 5/8” iron rod with PRS id cap, set at the southerly sideline of Wire Road;

Thence running by the southerly sideline of Wire Road the following courses and distances to the point of beginning:

N 46° 21’44” W a distance of 679.14 feet;

N 45° 05’37” W, a distance of 628.94 feet;

N 43° 50’35” W, a distance of 383.58 feet.

Containing 100.26 acres, more or less.

EXHIBIT B. LOT OWNERS LIABILITY FOR ASSESSMENTS.

The liability for Base Assessments and Special Assessments shall be equal for each Lot. The percentage liability of each Lot is determined by a formula, the numerator of which is one, and the denominator of which is the total number of Lots for which a Certificate of Occupancy has been issued by the Town of Wells.

EXHIBIT C. INITIAL RULES

The following initial rules shall apply to all of Wire Road Subdivision until such time as they are modified pursuant to the Declaration.

The purpose of Rules is not to anticipate all acceptable or unacceptable behavior in advance and eliminate all improvements or activities that fall outside of "the norm." In fact, it is expressly intended that the Reviewer under Article 5, and the Board, as appropriate, have discretion to approve or disapprove items, or to enforce or not enforce technical violations of the Governing Documents, based upon aesthetic or other considerations consistent with the established guidelines. As such, while something may be approved or permitted for one Owner under one set of circumstances, the same thing may be disapproved for another Owner under a different set of circumstances. The exercise of discretion in approving or enforcement shall not be construed as a waiver of approval or enforcement rights, nor shall it preclude the Board from taking enforcement action in any appropriate circumstances.

1. General. The Lots within Wire Road Subdivision shall be used only for single family residential, recreational, and related purposes, which may include, without limitation, an information center and/or a sales office for any real estate broker retained by the Declarant or its designees to assist in the sale of property described in Exhibit "A"," offices for the Association and any property manager retained by the Association, or such other uses as authorized in Article 17, consistent with this Declaration and any Supplement.

Restricted Activities. Unless expressly authorized by, and then subject to such conditions as may be imposed by, the Board, the following activities are prohibited within Wire Road Subdivision, except to the extent undertaken by the Declarant in the course of development of property in Wire Road Subdivision:

(a) Parking of commercial vehicles or equipment, motor homes, recreational vehicles, golf carts, boats and other watercraft, trailers, stored vehicles, or inoperable vehicles in places other than enclosed garages; provided, construction, service and delivery vehicles shall be exempt from this provision during normal business hours for such period of time as is reasonably necessary to provide service or to make a delivery to a Lot or the Common Area;

(b) Raising, breeding, or keeping animals except that a reasonable number of dogs, cats, or other usual and common household pets may be permitted. However, those pets which are permitted to roam free, or, in the Board's sole discretion, make objectionable noise, endanger the health or safety of, or constitute a nuisance or inconvenience to the occupants of others shall be removed upon the Board's request. If the pet owner fails to honor such request, the Board may remove the pet. Dogs shall be kept on a leash or otherwise confined in a manner acceptable to the Board whenever outside the dwelling. Pets shall be registered, licensed, and inoculated as required by law;

(c) Any activity that emits foul or obnoxious odors outside the dwelling unit or creates noise or

other conditions that tend to disturb the peace or threaten the safety of the occupants of others;

(d) Any activity that violates local, state, or federal laws or regulations; however, the Board shall have no obligation to take enforcement action in the event of a violation;

(e) Pursuit of hobbies or other activities that tend to cause an unclean, unhealthy, or untidy condition to exist outside of enclosed structures on the Lot;

(f) Any noxious or offensive activity which in the reasonable determination of the Board tends to cause embarrassment, discomfort, annoyance, or nuisance to persons using the Common Area or to the occupants of other dwelling units;

(g) Outside burning of trash, leaves, debris, or other materials, except during the normal course of constructing a dwelling or in the normal and intended use of barbecue grills and patio fireplaces.

(h) Use or discharge of any radio, loudspeaker, horn, whistle, bell, or other sound device so as to be audible to occupants of other Lots, except alarm devices used exclusively for security purposes;

(i) Accumulation of rubbish, trash, or garbage except between regular garbage pick-ups, and then only in approved containers stored in the garage or inside the dwelling;

(j) Discharge of firearms; provided, the Board shall have no obligation to take action to prevent or stop such discharge;

(k) On-site storage of fuel, except that a reasonable amount of fuel may be stored on each Lot for emergency purposes and operation of lawn mowers and similar tools or equipment, and the Association shall be permitted to store fuel for operation of maintenance vehicles, generators, and similar equipment. This provision shall not apply to any underground fuel tank authorized pursuant to Article 5;

(l) Any activities which materially disturb or destroy the wetlands or air quality within Wire Road Subdivision;

(m) Regular use of any lot to host religious activities, motivational meetings, classes, parties, or similar activities requiring the parking of a number of vehicles exceeding the number that can be accommodated in the host's garage, driveway, and the right-of-way immediately in front of and adjacent to the home;

(n) Posting of any signs on Lots, Common Areas, or rights-of-way within or adjacent to the Community, except that:

the Declarant and the Association may post signs as they deem appropriate;

Subject to the limitations in Section 7 .1 of the Declaration, an Owner may post one standard real estate sign not to exceed four feet in height, the total message area of which does not to exceed

12 square feet (all sides combined), advertising the Lot on which it is posted "for sale" or "for lease;" and

(o) Conversion of any carport or garage to finished space for use as an apartment or other integral part of the living area or use in any manner that would preclude its use for parking of that number of vehicles for which it was designed and intended; and

Any modification of anything, permanently or temporarily, on the outside portions of the dwelling, whether such portion is improved or unimproved, except in strict compliance with the provisions of Article 5 of the Declaration. This shall include, without limitation, signs, basketball hoops, and swing sets and similar sports and play equipment; clotheslines; garbage cans; woodpiles; hedges, walls, or fences of any kind; decks; and satellite dishes and antennas, except that:

Prohibited Conditions. The following shall be prohibited at Wire Road Subdivision:

(a)The introduction of plants, animals, devices, or other things of any sort whose activities or existence in any way is noxious, dangerous, unsightly, unpleasant, or of a nature as may diminish or destroy the enjoyment of Wire Road Subdivision;

(b) Structures, equipment, or other items on the exterior portions of a structure which have become rusty, dilapidated, or otherwise fallen into disrepair;

(c) Storage sheds;

(d) Above-ground pools; and

(e) Dog runs or dog pens.

EXHIBIT D. STORMWATER SYSTEM MAINTENANCE PLAN

[To be provided by Attar Engineering]

DECLARATION OF COVENANTS, CONDITIONS AND RESTRICTIONS

WIRE ROAD SUBDIVISION

Highpine Properties, LLC

FURTHER SUBMISSION TO WELLS PLANNING BOARD

Revised from May 20, 2016 draft

August 15, 2016

Prepared by
Joseph G. Carleton, Jr.
Attorney at Law
P.O. Box 369
Wells, ME 04090

Table of Contents

Article I. Governing Documents 1

1.1. Scope and Applicability. 1

1.3. Conflicts and Ambiguities. 1

1.4. Definitions. 2

Article 2. Reserved. 2

Article 3. Reserved. 2

Article 4. Association Membership and Voting Rights. 2

4.1. Membership Classes. 3

4.2. Voting. 3

Article 5. Architecture, Landscaping and Aesthetic Standards. 3

5 .1. General. 3

5.2. Design Review Authority. 4

5.3. Guidelines and Procedures. 5

5.4. No Waiver of Future Approvals. 6

5.5. Variances. 6

5.6. Limitation of Liability. 7

5.7. Certificate of Compliance. 7

Article 6. Maintenance, Repair and Replacement. 7

6.1. Maintenance by Owners. 7

Article 7. Use, Conduct and Transfer of Interests in Lots. 8

7.1. Reserved. 8

7.2. Reserved. 8

7.3. Rulemaking Authority and Procedures. 8

7.4. Protection of Owners and Others. 9

7.5. Owners' Acknowledgment and Notice to Purchasers. 10

7.6. Residential and Related Uses Only. 10
7.7. Leasing. 10
7.8. Transfer of Title; Governing Documents to new Owner. 11
7.9. Subdivision; Boundary Changes. 11
Article 8. Compliance and Enforcement. 11
8.1. Compliance. 11
8.2. Remedies requiring Opportunity to be Heard; Liens. 11
8.3. Remedies not Requiring Prior Notice. 12
8.4. Board Decision to Pursue Enforcement Action. 13
8.5. Attorney's Fees and Costs. 13
8.6. Enforcement of Ordinances. 13
Article 9. Property Management. 14
9.1. Acceptance and Control of Association Property. 14
9.2. Management and Control. 14
9.3. Maintenance of Common Areas. 14
9.4. Discontinuation of Operation. 14
Article 10. Provision of Services. 15
10.1. Provision of Services to Lots. 15
10.2. Water Supply. 15
10.3. Community sewer. 15
Article 11. Association Insurance. 16
11.1. Required Coverages. 16
11.2. Deductibles. 16
11.3. Policy Requirements. 16
11.4. Insurance Premiums. 17
Article 12. Association Finances. 17
12.1. Association Expenses. 18
12.2. Obligation to pay Assessments. 18
12.2a. Annual Budget Development and Ratification. 19
12.3 Base Assessments. 20

12.4. Special Assessments. 20
12.5. Other Charges. 21
12.6. Declarant Financial Obligations to Association. 21
12.7. Lien for Assessments. 22
12.8. Exempt Property. 22
12.9. Capitalization of Association. 23
12.10. Resale Certificates. 23
Article 13. Easements; Restrictions. 23
13.1. Easements in Common Area. 23
13.2. Easements of Encroachment. 24
13.3. Easements for Utilities, Etc. 24
13.4. Easements to Serve Additional Property. 24
13.5. Easements for Maintenance, Emergency, and Enforcement. 25
13.6. Easements for Pond Maintenance and Flood Water. 25
13.7. Temporary Right and Easement for Service to Lots. 25
13.8. Easements for Dry Hydrants. 26
13.9. Permanent Dedication of Open Space. 26
13.10. Town Access over Roads and the Open Space. 26
Article 13-A. Compliance with Governmental Approvals. 26
13-A.1. Compliance with Density Bonus Requirements. 26
13-A. 2. Other Governmental Approvals and Permits. 26
Article 14. Disclosures and Waivers. 27
14.1. Changes in Plan. 27
Article 15. Rights of Lenders. 27
15.1. Notices of Action. 27
15.2. No Priority. 28
15.3. Notice to Association. 28
15.4. Failure of Mortgagee to Respond. 28
Article 16. Reserved. 28
Article 17. Additional Rights Reserved to the Declarant. 28

17.1. Special Development Rights. 28
17.2. Marketing and Sales Activities. 29
17.3. Access for Development Purposes. 29
17.4. Right to Approve Changes in Community Standards. 29
17.5. Additional Covenants and Restrictions. 29
17.6. Reserved. 29
17.7. Community Systems. 30
17.8. Easement to Inspect and Right to Correct. 30
17.9. Right to Notice of Design or Construction Claims. 30
17.10. Right to Transfer or Assign the Declarant's Rights. 30
17.11. Termination of Rights. 31
Article 18. Dispute Resolution and Limitation on Litigation. 31
18.1. Agreement to Encourage Resolution of Disputes Without Litigation. 31
18.2. Dispute Resolution Procedures. 32
18.3. Initiation of Litigation by Association. 32
Article 19. Changes in the Common Area. 34
19.1. Condemnation. 34
19.2. Partition. 34
19.3. Transfer, Mortgaging or Dedication of Common Areas. 34
Article 20. Termination and Amendment of this Declaration. 35
20.1. Term and Termination. 35
20.2. Amendment. 35
EXHIBIT A. LAND INITIALLY SUBMITTED TO THIS DECLARATION. 37
EXHIBIT B. LOT OWNERS LIABILITY FOR ASSESSMENTS. 39
EXHIBIT C. INITIAL RULES 40
EXHIBIT D. STORMWATER SYSTEM MAINTENANCE PLAN 43

DECLARATION OF COVENANTS, CONDITIONS AND RESTRICTIONS FOR WIRE ROAD SUBDIVISION

Article I. Governing Documents

1.1. *Scope and Applicability.*

This Declaration by Highpine Properties, LLC, the Declarant and the owner of the property described in **Exhibit A**, applies to the Wire Road Subdivision, as shown on the Plats and Plans approved by the Wells Planning Board, dated _____, and recorded in the York County Registry of Deeds at Book ____, page ____, and to any amendments thereto.

This Declaration shall encumber the title to such Property, shall govern the development and use of such property, and shall be binding upon the Declarant and the future owners of any portion of such property, their respective heirs, successors, successors-in-title, and assigns, and any other person or entity that now or hereafter occupies or holds any legal, equitable, or beneficial interest in any portion of such property. Generally, reference in this document to the "Association" is a reference to the Wire Road Association unless the context dictates otherwise.

1.2. Reserved.

1.3. Conflicts and Ambiguities.

If there are conflicts between this Association's Articles of Incorporation, the Declaration, the Bylaws of the Wire Road Association (the "Association") or any Rules (the "Governing Documents") and Maine law or local ordinance shall control, to the extent it is mandatory. If there are conflicts between or among any of the documents, then the Articles of Incorporation, the Declaration, the Bylaws and the Rules (in that order) shall control.

If any court determines that any provision of this Declaration is invalid, or invalid as applied in a particular instance, such determination shall not affect the validity of other provisions or applications of such provision in other instances.

The Association's board of directors ("Board of Directors" or "Board ") may, by resolution, resolve any ambiguities in the Governing Documents, and the Board's reasonable interpretation of an ambiguous provision shall be determinative.

1.4. Definitions.

Capitalized terms used in this Declaration have the meaning described in the paragraph where they first appear. All other terms have their usual, commonly accepted definitions.

For convenience, some terms are defined here:

"Common Area" is all the real estate shown on the Plan which is not within Lot boundaries, as shown on the Plan. It includes Open Space and other areas.

"Declarant Affiliate" is any Person that controls, is controlled by, or is under common control with the Declarant, and any Person that is an owner, a member, a partner, or a shareholder of the Declarant.

"Declarant Control Period" is the period of time that the Declarant is entitled to appoint the members of the Association's board of directors. It begins on the date the Declaration is recorded and terminates upon the first of the following to occur:

(a) when the Declarant has conveyed 75% of the total of lots approved for the Property by the Wells Planning Board to Persons other than a Declarant Affiliate;

(b) the maximum period permitted by Maine law; or

(c) when, in its discretion, the Declarant voluntarily and expressly surrenders such right in a recorded instrument.

"Development and Sale Period" is the period of time during which the Declarant, any "Declarant Affiliate," or any Builder owns real property in the community primarily for development or sale or has an unexpired option to expand the community pursuant to Article 16.

"Governing Documents" means the various documents, with plans, described in Section 1.3.

"Lot"." "Lot" refers to a parcel of land where a single dwelling unit may be place, according to an approved subdivision plan recorded in the York County Registry of Deeds.

"Plan" refers to the set of subdivision plans for development of the Property approved by the Wells Planning Board and shown on plans recorded at Plan Book _____, page _____ in the York County Registry of Deeds, as the Plans may be amended from time to time.

"Open Space" area refers to a portion of the Common Area which is set aside, dedicated, or reserved for public or private use or enjoyment, protection of natural or historic features, protection of abutting property owners, or to provide areas suitable for active or passive recreation, as approved by the Planning Board.

"Owner" refers to the owners of subdivision lots shown on the Plan. All Owners are also Members of the Association.

Article 2. Reserved.

Article 3. Reserved.

Article 4. Association Membership and Voting Rights.

4.1. Membership Classes.

The Association initially has two classes of membership, “A” Class, the Owner membership, which is comprised of all Owners, including Builders and the Declarant, if it is an Owner, and “B” Class, which consists solely of the Declarant. All persons holding a membership in the Association are referred to in this Declaration as "Members."

a. Owner Membership. Every Owner is automatically a Member of the Association. However, there shall be only one membership per Lot. Thus, if a Lot has more than one Owner, all co-Owners of the Lot share the privileges of such membership, subject to reasonable Board regulation and the restrictions on voting set forth below and in the Bylaws. If an Owner is a corporation, a partnership, or other legal entity, its membership rights may be exercised by any officer, director, partner, or trustee, or by an individual the Owner designates from time to time in a writing to the Association's Secretary, except that only the individuals residing in the Lot may use any Common Area recreational facilities available for use by Owners.

b. Declarant Membership. The Declarant holds the sole Declarant membership, designated as Class “B.”. The Declarant membership shall be temporarily suspended during any period that the Declarant does not own a Lot, subject to automatic reinstatement upon Declarants acquisition of any Lot or expansion of the Community pursuant to Section 16.1; however, such temporary suspension shall not suspend, terminate, or otherwise affect the Declarant Control Period or any other rights reserved to the Declarant hereunder. The Declarant membership shall terminate upon expiration of the Declarant Control Period, or on such earlier date as the Declarant determines and declares in a recorded instrument.

4.2. Voting.

Each Lot is assigned one equal vote, subject to the limitations on voting set forth in this Declaration and the other Governing Documents. No vote shall be exercised for any property exempt from assessment under Section 12.8.

If there is more than one Owner of a Lot, its vote shall be exercised as the co-owners holding a majority of the ownership interest determine among themselves. Any co-Owner may cast the vote for the Lot or consent to any action requiring approval of the Owners on behalf of all co- Owners, and majority agreement shall be conclusively presumed unless another co-owner protests promptly to the President or other person presiding over the meeting or the balloting, in the case of a vote taken outside of a meeting. In the absence of majority agreement, the Lot’s vote shall be suspended if two or more co-Owners seek to exercise it independently. No more than one vote shall be cast for any Lot.

Article 5. Architecture, Landscaping and Aesthetic Standards.

5 .1. General.

All site work, landscaping, structures, improvements, and other items placed on a Lot or other area by anyone other than the Declarant or a Declarant Affiliate in a manner or location visible from outside of existing structures ("Improvements") are subject to standards for design, landscaping, and

aesthetics adopted pursuant to this Article ("Design Guidelines") and the approval procedures set forth in this Article, except as this Article or the Design Guidelines may otherwise specify.

No prior approval is necessary to repaint the exterior of existing structures using the most recently approved color scheme or to rebuild or restore any damaged structures in a manner consistent with the plans and specifications most recently approved for such structures. No approval is required for work done to the interior of a structure that is not visible from outside of the structure.

Any dwelling constructed on the Property shall be designed by and built in accordance with the plans and specifications of a licensed architect or professional building designer unless the Declarant or its designee otherwise approves, in its sole discretion.

Approval under this Article is not a substitute for any approvals or reviews required by the Town of Wells or any governmental agency or entity having jurisdiction over architectural or construction matters.

This Article shall not apply to structures existing on any portion of the Community prior to submitting it to this Declaration, or to the Declarant's or any Declarant Affiliate's design and construction activities, or to the Association's design and construction activities during the Declarant Control Period, except that the Declarant and Declarant Affiliates shall comply with the Design Guidelines.

5.2. Design Review Authority.

Declarant. The Declarant shall have exclusive authority to review and act upon all applications for review of proposed Improvements until the later of (i) the expiration of the Development and Sale Period, or (ii) such time as all Lots planned for the property have been improved with dwellings that are substantially complete and occupied or ready for occupancy or (iii) such time as the Declarant relinquishes such authority in writing. The Declarant may designate one or more persons to act on its behalf in reviewing any application. In reviewing and acting upon any request for approval, the Declarant and its designee act solely in the Declarant's interest and owe no duty to any other Person.

From time to time, the Declarant may delegate any or all of its rights under this Article to other Persons or committees. Any such delegation shall be in writing, shall specify the scope of responsibilities delegated, and shall be subject to (i) the Declarant’s right to revoke such delegation at any time and reassume its prior control, and (ii) the Declarant's right to veto any decision which it determines, in its discretion, to be inappropriate or inadvisable. So long as the Declarant has any rights under this Article, the jurisdiction of others shall be limited to such matters as the Declarant specifically delegates.

Design Review Committee. Upon the Declarant's delegation of authority, or upon expiration or termination of the Declarant's rights under this Article, the Board shall appoint a Design Review Committee ("Design Review Committee" or "DRC") to assume jurisdiction over matters within the scope of the delegated authority or this Article, respectively. The DRC shall consist of at least three, but not more than seven, persons, who shall serve and may be removed and replaced in the Board's discretion. DRC members need not be Owners or representatives of Owners. The DRC may, but need not, include architects, engineers, or similar professionals. The Association may compensate DRC members in such manner and amount, if any, as the Board may determine appropriate.

Until expiration of the Declarant's rights under this Article, the DRC shall notify the Declarant in writing within three business days of any action (i.e., approval, partial approval, or disapproval) it

takes under this Article. A copy of the application and any additional information the Declarant may require shall accompany the notice. The Declarant shall have 10 business days after receipt of such notice to veto any such action, in its sole discretion, by written notice to the DRC.

Unless and until such time as the Declarant delegates all or a portion of its reserved rights to the DRC or the Declarant's rights under this Article terminate, the Association shall have no jurisdiction over architectural matters.

Reviewer. For purposes of this Article, the entity having jurisdiction in a particular case shall be referred to as the "Reviewer."

Fees; Assistance. The Reviewer may establish and charge reasonable fees for its review of applications and may require that such fees be paid in advance. Such fees may also include reasonable costs incurred in having professionals review any application. The Board may include the compensation of such persons in the Association's annual operating budget.

5.3. Guidelines and Procedures.

Design Guidelines. The Declarant may prepare the initial Design Guidelines. The Design Guidelines are intended to provide guidance to Owners and contractors regarding matters of particular concern to the Reviewer. The Design Guidelines are not the exclusive basis for the Reviewer's decisions, and compliance with the Design Guidelines does not guarantee approval.

The Declarant shall have sole and full authority to amend the Design Guidelines for so long as it has review authority under Section 5.2(a). The Declarant's right to amend the Design Guidelines shall continue even if it delegates reviewing authority to the DRC, unless the Declarant also delegates the power to amend to the DRC. Upon termination or delegation of the Declarant's right to amend, the DRC may amend the Design Guidelines with the Board's consent.

Amendments to the Design Guidelines shall apply prospectively only. They shall not require modifications to or removal of any structures previously approved once the approved construction or modification has begun. However, any new work on such structures must comply with the Design Guidelines as amended. There shall be no limitation on the scope of amendments to the Design Guidelines, and such amendments may eliminate requirements previously imposed or otherwise make the Design Guidelines less restrictive. The Reviewer shall make the Design Guidelines, as they may be amended, available to Owners and their contractors upon request.

Procedures. Unless the Design Guidelines provide otherwise, no activities within the scope of this Article (as described in Section 5.1) may begin on any property within the Property until a written application is submitted to and approved by the Reviewer. The application must be accompanied by plans and specifications and such other information as the Reviewer or the Design Guidelines may require.

In reviewing each application, the Reviewer may consider any factors it deems relevant, including, without limitation, harmony of the proposed external design with surrounding structures and environment. Decisions may be based on purely aesthetic considerations. Each Owner acknowledges that such determinations are purely subjective and that opinions may vary as to the desirability and/or attractiveness of particular improvements.

The Reviewer shall have the sole discretion to make final, conclusive, and binding determinations on matters of aesthetic judgment so long as they are made in good faith and in accordance with required procedures.

The Reviewer shall make a determination on each application after receipt of a completed

application with all required information. The Reviewer may permit or require that an application be submitted or considered in stages, in which case a final decision shall not be required until after the final, required submission. The Reviewer may (i) approve the application with or without conditions; (ii) approve a portion of the application and disapprove other portions; or (iii) disapprove the application.

The Reviewer shall notify the applicant in writing of the final determination on any application no later than 30 business days after its receipt of a completed application and all required submissions; however, with respect to any DRC determination subject to the Declarant's veto right under Section 5.2(b), the Reviewer shall notify the applicant of the final determination within 40 business days after its receipt of the final determination and all required submissions. Notice shall be deemed given at the time the envelope containing the response is deposited in the U.S. mail. Hand delivery, facsimile, electronic mail, or similar delivery of such written notice also shall be sufficient and shall be deemed given at the time of confirmed delivery to the applicant.

If the Reviewer fails to respond within the time period required above, approval shall be deemed given. However, no approval, whether expressly granted or deemed granted, shall be inconsistent with the Design Guidelines unless a written variance has been granted pursuant to Section 5.5.

As part of any approval, the Reviewer may require that construction commence within a specified time period. If construction does not commence within the required period, the approval shall expire, and the Owner must reapply for approval before commencing any activities. Once construction is commenced, it shall be diligently pursued to completion. All work shall be completed within 12 months of commencement unless otherwise specified in the notice of approval or unless the Reviewer, in its discretion, grants an extension in writing.

The Reviewer may exempt certain activities from the application and approval requirements of this Article, if such activities are undertaken in compliance with the Design Guidelines.

Exercise of the review powers described in this Section shall not violate applicable laws relating to discrimination in housing.

5.4. No Waiver of Future Approvals.

The people reviewing applications under this Article will change from time to time, and opinions on aesthetic matters, as well as interpretation and application of the Design Guidelines, may vary accordingly. It may not always be possible to identify objectionable features until work is completed. In such cases, the Reviewer may elect not to require changes to objectionable features. However, the Reviewer may refuse to approve similar proposals in the future. Approval of applications or plans shall not constitute a waiver of the right to withhold approval as to any similar applications, plans, or other matters subsequently or additionally submitted for approval.

5.5. Variances.

The Reviewer may authorize variances from compliance with any of the Design Guidelines and any procedures when it determines that circumstances such as topography, natural obstructions, hardship, or aesthetic or environmental considerations justify a variance, but no variance shall (a) be effective unless in writing; (b) be contrary to this Declaration; or (c) prevent the Reviewer from denying a variance in other circumstances. A variance requires the Declarant's written consent during the Development and Sale Period and, thereafter, requires the Board's written consent.

5.6. Limitation of Liability.

This Article establishes standards and procedures as a mechanism for maintaining and enhancing the overall aesthetics of this Property; they do not create any duty to any Person. Review and approval of any application pursuant to this Article may be based purely on aesthetic considerations. The Reviewer is not responsible for the structural integrity or soundness of approved construction or modifications, for materials used, for compliance with building codes and other governmental requirements, or for ensuring that structures are fit for their intended purpose, or for ensuring that all dwellings are of comparable quality, value, size, or design, or are aesthetically pleasing or otherwise acceptable to other Owners. Neither the Reviewer nor any member of the DRC shall have any liability for approving plans that are inconsistent with the Design Guidelines provided that such person acted in good faith in approving such plans.

The Declarant, Declarant Affiliates, the Association, its officers, the Board, any committee, and any member of any of the foregoing, shall not be liable for (a) soil conditions, drainage, or other general site work; (b) any defects in plans revised or approved hereunder; (c) any loss or damage arising out of the action, inaction, integrity, financial condition, or quality of work of any contractor or its subcontractors, employees, or agents, whether or not the Declarant has approved or featured such contractor as a Builder; (d) view preservation; or (e) any injury, damages, or loss arising out of the manner or quality or other circumstances of approved construction on or modifications to any Unit. In all matters, the Association shall defend and indemnify the Board, the Reviewer, and the members of each, as provided in the Bylaws.

5.7. Certificate of Compliance.

Any Owner may request in writing that the Reviewer issue a certificate of compliance certifying that there are no known violations of this Article or the Design Guidelines. The Association shall either grant or deny such written request within 30 days after receipt and may charge a reasonable administrative fee. Issuance of such a certificate shall prevent the Association from taking enforcement action against an Owner for any condition known to the Association on the date of such certificate.

Article 6. Maintenance, Repair and Replacement.

6.1. Maintenance by Owners.

Unless otherwise provided in the Governing Documents, each Owner is responsible for maintenance, repair and replacement of his or her own dwelling and other structure and of the land constituting the Lot. Maintenance, repair and replacement responsibilities include all structures, landscaping, and other improvements, in a manner consistent with the Governing Documents, unless such maintenance responsibility is otherwise assumed by or assigned to the Association pursuant to this Declaration, any Supplement, or by law.

The Association may provide services to Lot owners, including the clearing of snow and ice from driveways, for a fee.

6.2. Maintenance by the Association

The Wire Road Association shall be established by the Declarant as a Maine non-profit corporation, and shall be the governing body for the Wire Road subdivision. Its responsibilities shall include:

a. Maintenance of the Open Space and other portions of the Property, except the Lots.
b. Maintenance and repair of the private roads within the subdivision
c. Provision for the clearing of snow and ice from the private roads within the subdivision.
d. Maintenance, repair and replacement of stormwater management systems as required by government authorities.

Article 7. Use, Conduct and Transfer of Interests in Lots.

7.1. Reserved.

7.2. Reserved.

7.3. Rulemaking Authority and Procedures.

(a) The initial Rules are attached as Exhibit "C." The Declarant and the Board are authorized to change the Rules in accordance with the following procedures, subject to the limitations set forth in Section 7.4.

(b) Declarant Authority. So long as the Declarant has the right unilaterally to amend this Declaration pursuant to Section 20.2, the Declarant may unilaterally amend Exhibit "C" to add new Rules or to modify or rescind existing Rules.

(c) Board Authority. Subject to the notice and veto provisions and the Board's duty to exercise judgment and reasonableness on behalf of the Association and its Members, the Board may adopt new Rules and modify or rescind existing Rules by majority vote of the directors at any Board meeting. However, during the Development and Sale Period, any such action shall also be subject to the Declarant's approval.

(d) Notice; Effective Date. Changes in the Rules adopted under this Section shall take effect 30 days after the date on which written notice of the Rules change is given to the Owners unless, within such 30-day period the Members petition the Board for a special meeting pursuant to the Bylaws and veto the pro-posed Rule change by a majority of the total votes represented in person or by proxy at such meeting, a quorum being present.

(e) Administrative and Operating Policies. The procedures set forth in this section do not apply to administrative and operating policies that the Board may adopt relating to the Common Areas, such as safety regulations or the method of allocating or reserving use of a facility (if permitted) by particular individuals at particular times, notwithstanding that such policies may be published as part

of the Rules.

(f) Conflicts. No action taken under this Section shall have the effect of modifying or repealing the Design Guidelines or any provision of this Declaration other than the Rules. In the event of a conflict between the Design Guidelines and the Rules, the Design Guidelines shall control. In the event of a conflict between the Rules and any provision of this Declaration (exclusive of the Rules), the Declaration shall control.

7.4. Protection of Owners and Others.

Except as may be set forth in this Declaration (either initially or by amendment) or in the initial Rules set forth in Exhibit "C," all Rules shall comply with the following provisions:

Similar Treatment. Similarly situated Lots shall be treated similarly.

Displays. No Rule shall prohibit an Owner or occupant from displaying political, religious, or holiday symbols and decorations on his or her Lot of the kinds normally displayed in single-family residential neighborhoods, nor shall any Rule regulate the content of political signs. However, the Association may adopt time, place, and manner restrictions with respect to signs, symbols, and displays visible from outside structures on the Lot, including reasonable limitations on size and number.

Household Composition. No Rule shall interfere with an Owner's freedom to determine house hold composition, except that the Association may impose and enforce reasonable occupancy limitations and conditions based on Lot size and facilities and its fair share use of the Common Area.

Activities within Dwellings. No Rule shall interfere with the activities carried on within a dwelling, except that the Association may prohibit activities not normally associated with residential property. It may also restrict or prohibit activities that create monetary costs for the Association or other Owners, that create a danger to anyone's health or safety, that generate excessive noise or traffic, that create unsightly conditions visible from outside the dwelling, or that are an unreasonable source of annoyance.

Allocation of Burdens and Benefits. No Rule shall alter the allocation of financial burdens among the various Lots or rights to use the Common Area set forth in this Declaration to the detriment of any Owner over that Owner's objection expressed in writing to the Association. Nothing in this provision shall prevent the Association from changing the Common Area available, from adopting generally applicable rules for use of Common Area, or from denying use privileges to those who are delinquent in paying assessments, abuse the Common Area, or violate the Governing Documents. This provision does not affect the right to increase the amount of assessments as provided in Article 12.

Leasing and Transfer of Lots. No Rule shall prohibit leasing or transfer of any Lot or require approval prior to leasing or transferring a Lot except as provided in Section 7 .6. The Rules may require that Owners use Board-approved lease forms (or include specific lease terms) and may impose a reasonable administrative fee in connection with the Board's review of a lease.

Abridging Existing Rights. No Rule shall require that an Owner or occupant dispose of personal property kept in or on the Lot in compliance with the Rules in effect at the time such personal property was brought onto the Lot. This exemption shall apply only during the period of such Owner's ownership of the Lot and shall not apply to subsequent Owners who take title to the Lot after adoption of the Rule.

Reasonable Rights to Develop. No Rule may unreasonably interfere with the ability of the Declarant, any Declarant Affiliate or Builder to develop, market, and sell property in Wire Road Subdivision.

Interference with Easements. No Rule may unreasonably interfere with the exercise of any easement.

7.5. Owners' Acknowledgment and Notice to Purchasers.

By accepting a deed, each Owner acknowledges and agrees that the use, enjoyment, and marketability of his or her Lot is limited and affected by the Rules, which may change from time to time. All Lot purchasers are hereby notified that the Association may have adopted changes to the Rules and that such changes may not be set forth in a recorded document. A copy of the current Rules and administrative policies are available from the Association upon request. The Association may charge a reasonable fee to cover its reproduction cost.

7.6. Residential and Related Uses Only.

Lots may be used only for residential and related purposes, except as the Declarant may otherwise authorize with respect to construction, marketing and sale activities of the Declarant and Builders it designates, and as otherwise authorized in this section. A business activity shall be considered "related" to a residential use and thus permitted under this Section only if conducted by a person or persons residing in the Lot and only if the business activity:

(a) is not apparent or detectable by sight, sound, or smell from outside of a permitted structure;

(b) complies with applicable zoning requirements;

(c) does not involve regular visitation of the Lot by employees who do not reside there, clients, customers, suppliers, or other business invitees, or door-to-door solicitation within the Community; and

(d) is consistent with the residential character of that portion of the Community in which the Lot is located and does not constitute a nuisance or a hazardous or offensive use, or threaten the security or safety of others, as the Board determines in its discretion.

"Business" shall have its ordinary, generally accepted meaning and shall include, without limitation, any occupation, work, or activity undertaken on an ongoing basis which involves providing goods or services to Persons other than the family of the producer and for which the producer receives a fee, compensation, or other form of consideration, regardless of whether (i) such activity is engaged in full or part time; (ii) such activity is intended to or does generate a profit; or (iii) a license is required.

Leasing a house on a Lot shall not be considered a "business" within the meaning of this Article.

7.7. Leasing.

Any dwelling that is leased shall be leased only in its entirety; separate rooms, floors, or other areas within a dwelling may not be separately leased.

All leases shall be in writing and shall disclose that the tenants and all occupants of the leased unit are bound by and obligated to comply with the Governing Documents. However, the Governing Documents shall apply regardless of whether such a provision is specifically set forth in the lease.

Within 10 days of a lease being signed, the Owner of the leased Unit shall notify the Board or the Association's managing agent of the lease and provide any additional information the Board may reasonably require. The Owner must give the tenant copies of the Governing Documents. In addition to, but consistent with, this subsection, the Association or the Board may adopt Rules governing leasing and subleasing, including a requirement for a minimum lease period.

7.8. Transfer of Title; Governing Documents to new Owner.

Any Owner other than the Declarant desiring to sell or otherwise transfer title to his or her Lot shall provide, within a reasonable time to the Board, notice of the name and address of the purchaser or transferee, the date of such transfer of title, and such other information as the Board may reasonably require. The Person transferring title shall continue to be jointly and severally responsible with the Person accepting title for all obligations of the Owner, including assessment obligations, until the date upon which the Board receives such notice, notwithstanding the transfer of title.

Prior to the sale of any Lot by an Owner other than the Declarant, the selling Owner shall request from the Association and make available for inspection by the prospective purchaser, upon such purchaser's request, a copy of the Governing Documents and such other items as may be required by Maine law. The Association shall provide the requested documents within 30 days after receipt of the Owner's written request. The Association may charge the Owner a reasonable fee to cover its direct out-of-pocket cost of copying and providing the information.

7.9. Subdivision; Boundary Changes.

No Person shall subdivide or change the boundary lines of any Lot or combine them without the approval of the Wells Planning Board. During the Development and Sale Period, any such proposed change shall also require the written approval of the Declarant. After the Development and Sale Period, written approval shall also be obtained from the Board. Any change in the subdivision shall be effective only upon recording of a plat or other legal instrument reflecting the subdivision or new boundaries of the affected Lot(s).

Article 8. Compliance and Enforcement.

8.1. Compliance.

Every Owner, occupant, and visitor to a Lot must comply with the Governing Documents and shall be subject to sanctions for violations as described in this Article. In addition, each Owner shall be responsible for, and may be sanctioned for, all violations of the Governing Documents by the occupants of or visitors to their Lot and for any damage to the Common Area that such occupants or visitors cause.

8.2. Remedies requiring Opportunity to be Heard; Liens.

The Association, the Declarant, any Declarant Affiliate, and every affected Owner shall have the

right to file suit at law or in equity to enforce the Governing Documents. In addition, the Board may impose sanctions for violation of the Governing Documents, including those sanctions listed below and any others described elsewhere in the Governing Documents.

Sanctions Requiring Prior Notice and Hearing. After written notice and an opportunity to be heard in accordance with the Bylaws, the Board may, without liability to any Person:

(i) impose reasonable monetary fines, which shall constitute a lien upon the violator's Lot, as set forth more fully in Section 12.7. In the event that any occupant, guest, or invitee violates the Governing Documents and a fine is imposed, the fine may, but need not, first be assessed against the violator; however, if the fine is not paid by the violator within the time period set by the Board, the Owner shall pay the fine upon notice from the Board;

(ii) suspend an Owner's right to vote (except that no notice or hearing is required if the Owner is more than 60 days delinquent in paying any Base or Special Assessment, Other charges, service fees or consumption fees);

(iii) suspend any Person's right to use the Common Area facilities, if any, (A) for any period during which any charge against such Owner's Lot remains delinquent, and (B) for a period not to exceed 30 days for a single violation or for a longer period in the case of any continuing violation (except that no notice or hearing is required if the Owner is more than 60 days delinquent in paying any assessment or other charge owed the Association); however, nothing herein shall authorize the Board to limit ingress or egress to or from a Lot; .

(iv) suspend services the Association provides (except that no notice or hearing is required if the Owner is more than 60 days delinquent in paying any assessment or other charge owed to the Association);

(v) exercise self-help or take action to abate any violation of the Governing Documents in a non-emergency situation (including removing personal property that violates the Governing Documents);

(vi) preclude any contractor, subcontractor, agent, employee, or other invitee of an Owner who fails to comply with the terms and provisions of Article 5 and the Design Guidelines from continuing or performing any further activities in Wire Road Subdivision;

(vii) levy Other Charges to cover costs the Association incurs in bringing a Lot into compliance with the requirements under the Governing Documents; and

(vii) record a notice of violation with respect to any Lot on which a violation exists.

If, after notice and an opportunity for a hearing, the violation continues or recurs within 12 months after the date of such notice, the Board may impose any of the above sanctions without further notice or opportunity for another hearing.

8.3. Remedies not Requiring Prior Notice.

The Board may take the following actions to obtain compliance with the Governing Documents without prior notice or a hearing and without liability to any Person:

(i) exercise self-help or take action to abate a violation in any situation which requires prompt action to avoid potential injury or damage or unreasonable inconvenience to other persons or their property (specifically including, but not limited to, the towing of vehicles that are in violation of parking rules and regulations);

(ii) exercise self-help or take action to abate a violation on the Common Area under any circumstances

(ii) require an Owner, at the Owner's expense, to perform maintenance or to remove any

structure or improvement on such Owner's Lot that is in violation of the requirements under the Governing Documents and to restore the property to its previous condition;

(iv) enter the property and exercise self-help to remove or cure a violating condition if an Owner fails to take action as required pursuant to subsection (iii) above within 10 days after receipt of written notice to do so, and any such entry shall not be deemed a trespass; or

(v) bring suit at law for monetary damages or in equity to stop or prevent any violation, or both;

Action for Possession. If an Owner is delinquent in paying any assessment or other charges due to the Association under this Declaration, the Association may institute an action for possession of the Lot as provided for in Maine law.

8.4. Board Decision to Pursue Enforcement Action.

The Board may determine whether to take enforcement action by exercising the association's power to impose sanctions or commence an action for a violation of the declaration, bylaws, and rules, including whether to compromise any claim for unpaid assessments or other claim made by or against it. The Board does not have a duty to take enforcement action if it determines that, under the facts and circumstances presented:

(1) the association's legal position does not justify taking any or further enforcement action;

(2) the covenant, restriction, or rule being enforced is, or is likely to be construed as, inconsistent with law;

(3) although a violation may exist or may have occurred, it is not so material as to be objectionable to a reasonable person or to justify expending the association's resources; or

(4) it is not in the association's best interests to pursue an enforcement action.

The Board's decision not to pursue enforcement under one set of circumstances does not prevent the Board from taking enforcement action under another set of circumstances, but the Board may not be arbitrary or capricious in taking enforcement action.

8.5. Attorney's Fees and Costs.

In any action to enforce the Governing Documents, if the Association prevails, it shall be entitled to recover all costs, including, without limitation, attorneys' fees and court costs reasonably incurred in such action.

8.6. Enforcement of Ordinances.

The Association, by contract or other agreement, may enforce applicable town ordinances and conditions of approval for the Wire Road Subdivision property. Violation of governmental requirements and conditions is also a violation of these covenants and subject an owner to the same penalties by the Association. See Article 13-A of this Declaration for more details.

Article 9. Property Management.

9.1. Acceptance and Control of Association Property.

Transfers and Conveyances by the Declarant. The Declarant may transfer all Property, including the access road, but excluding the Lots, to the Association or to the Town of Wells, subject to easement rights in favor of the Declarant for access to Declarant's other land and for utilities, and for public access, and any other reserved rights of the Declarant. Upon the Declarant's written request, the Association shall reconvey to the Declarant, or any Declarant Affiliate or Builder, any unimproved real property that the Declarant originally conveyed to the Association for no payment, to the extent conveyed in error or needed to make minor adjustments in property lines or accommodate changes in the Plan.

.

9.2. Management and Control.

The Association or the Town of Wells, upon transfer of title to the Common Area to it, is responsible for the Common Area, subject to any covenants set forth in the deed or other instrument transferring the property. They may enter into leases, licenses, or operating agreements with respect to portions of the Common Area, for payment or no payment, as deemed appropriate.

9.3. Maintenance of Common Areas.

The deeded owner of the Common Areas shall maintain:

a. the Open Space, if conveyed to the Association
b. Other portions of the Common Area;
c. Landscaping and signage within public rights-of-way, if any, within Wire Road Subdivision, landscaping within public rights-of-way adjacent to Wire Road Subdivision, to the extent that the Board determines it necessary or desirable to do so, and landscaping and signage features at the entrances to the subdivision;
d. The stormwater management system based on standards and requirements of the Maine Department of Environmental Protection.
e. those other areas where maintenance responsibilities are required by governmental bodies, whether they otherwise are within the "Common Area" or "Open Space;"
f. such portions of any additional property as may be dictated by this Declaration, any Supplement, or any covenant or agreement for maintenance entered into by, or otherwise binding on, the Association

This Section 9.3 may not be amended to reduce or eliminate any Association's obligation to maintain, repair or replace as required by governmental requirements, including the Wells Planning Board or the Maine Department of Environmental Protection, without the written approval of such agency.

9.4. Discontinuation of Operation.

To the extent that the Association has title to the Common Areas, it shall maintain it, unless the

Declarant, during the Development and Sale Period, and Members entitled to cast 75% of the total votes in the Association, and the Wells Planning Board and Maine Department of Environmental Protection, if applicable, consent in writing to discontinue such operation. This Section shall not apply to restrict the Board's ability to restrict temporary closures or interruptions in operation as the Board may determine appropriate to perform maintenance or repairs.

Article 10. Provision of Services.

10.1. Provision of Services to Lots.

The Association may arrange for or provide services to Owners and their Lots, directly or through contracts with the Declarant or other third parties. The Association may enter into bulk service agreements by which a particular service is provided to all Lots, or it may offer various services at the option of each Owner, or both. It may charge owners individually for each such service, provide them as a common expense or charge individual owners for some and provide others as a common expense, in its discretion. By way of example and not limitation, such services might include such things as cable television, community technology, utilities, security, trash collection, and landscape maintenance. The Association may also require mailboxes to be congregated in one or more central areas in compliance with municipal approvals and set standards for their design, installation and maintenance.

Any Association contract for services may require individual Owners or occupants to execute separate agreements directly with the Persons providing components or services in order to gain access to or obtain specified services. Such contracts and agreements may contain terms and conditions that, if violated by the Owner or occupant of a Lot, may result in termination of services provided to such Lot. Any such termination shall not relieve the Owner of the continuing obligation to pay assessments for any portion of the charges for such service that are assessed against the Lot as a Common Expense pursuant to Article 12.

In its discretion, the Board may discontinue offering particular services and may modify or cancel existing contracts for services, subject to the contract terms and any provision that may exist elsewhere in the Governing Documents requiring the Association to provide such services.

10.2. Water Supply.

Water supply for each lot will be supplied by private wells. No well shall be installed without the prior written consent of the Declarant.

10.3. Community sewer.

The Declarant will construct and the Association will maintain, repair and replace community sewer systems according to the Plan, the conditions of approval by the Wells Planning Board and other State agencies having jurisdiction. Charges for the operation, repair, maintenance and replacement of these facilities is authorized under Section 12.5 of this Declaration.

Article 11. Association Insurance.

11.1. Required Coverages.

The Association shall obtain and maintain in effect Blanket property insurance covering "all risks of direct physical loss" on a replacement cost basis (or comparable coverage by whatever name denominated) for all insurable improvements on any Common Area it owns, together with commercial general liability insurance, insuring the Association and its Members for property damage or personal injury caused by the negligence of the Association or any of its Members, employees, agents, or contractors while acting on its behalf. If generally available at reasonable cost, such coverage shall have a limit of at least $1,000,000.00 per occurrence with respect to bodily injury, personal injury, and property damage;

(c) Workers compensation insurance and employer's liability insurance, if and to the extent required by law;

(d) Directors and officer's liability coverage with a limit of at least $1,000,000.00;

(e) Contractual liability or similar coverage to fund the Association's obligations to indemnify others under this Declaration, the Bylaws, and any agreements the Association may enter into from time to time; and

(f) Commercial crime insurance, including fidelity insurance covering all Persons responsible for handling Association funds in an amount determined in the Board's business judgment but not less than an amount equal to one-fourth of the annual Base Assessments (as defined in Section 12.3) on all Lots, plus reserves on hand. Fidelity insurance policies shall contain a waiver of all defenses based upon the exclusion of Persons serving without compensation.

The Association shall arrange for periodic reviews of the sufficiency of its insurance coverage by one or more qualified Persons, at least one of whom must be familiar with insurable replacement costs in the York County, Maine area. In the exercise of its business judgment, the Board may obtain additional insurance coverage and higher limits than this Section requires.

11.2. Deductibles.

The Association's policies may contain a reasonable deductible, which shall not be subtracted from the face amount of the policy in determining whether the policy limits satisfy the requirements of Section 11.1. In the event of an insured loss, the deductible shall be treated as a Common Expense in the same manner as the premiums for the applicable insurance coverage under Section 11.4. However, if the Board reasonably determines, after notice and an opportunity to be heard in accordance with the Bylaws, that the loss is the result of the negligence or willful misconduct of one or more Owners, their guests, invitees, or lessees, then the Board may assess the full amount of such deductible against such Owner(s) and their Lots.

11.3. Policy Requirements.

All Association policies shall provide for a certificate of insurance to be furnished to the Association and, upon request, to each Owner.

To the extent available at reasonable cost and terms, all Association insurance shall:

(a) be written with a company authorized to do business in Maine which satisfies the requirements of the Federal National Mortgage Association, or such other secondary mortgage market agencies or federal agencies as the Board deems appropriate;

(b) be written in the name of the Association as trustee for the benefited parties. All policies shall be for the benefit of the Association and its members;

(c) not be brought into contribution with insurance purchased by Owners, occupants, or their Mortgagees individually;

(d) contain an inflation guard endorsement, if reasonably available;

(e) include a co-insurance waiver or an agreed amount endorsement, if the policy contains a co-insurance clause;

(f) provide that each Owner is an insured person with respect to liability arising out of such Owner's status as a member of the Association;

(g) provide a waiver of subrogation against any Owner or household member of an Owner; and

(h) include an endorsement precluding cancellation, invalidation, suspension, or non-renewal by the insurer on account of any act or omission of one or more Owners, unless acting on the Association's behalf within the scope of their authority, or on account of any curable defect or violation, without prior written demand to the Association and allowance of a reasonable time to cure the defect or violation.

In addition, the Board shall use reasonable efforts to secure insurance policies that provide:

(a) a waiver of subrogation as to any claims against the Association's directors, officers, employees, and manager;

(Subrogation is a legal concept by which one person is substituted in the place of another with respect to a lawful claim or right. For example, once they have paid a claim by an insured party, insurance companies generally have the right to step into the shoes of the insured party and sue anyone that the insured party could have sued.)

(b) a waiver of the insurer's right to repair and reconstruct instead of paying cash;

(c) an endorsement requiring at least 30 days' prior written notice to the Association of any cancellation, substantial modification or non-renewal;

(d) a cross liability provision; and

(e) a provision vesting in the Board exclusive authority to adjust losses. However, Mortgagees having an interest in such losses may not be precluded from participating in the settlement negotiations, if any, related to the loss.

11.4. Insurance Premiums.

Premiums for all Association insurance shall be a Common Expense as defined in Section 12.1, unless the Board reasonably determines that other treatment of the premiums is more appropriate, and premiums for insurance on a Lot which the Association purchases upon the Owner's failure to do so pursuant to Section 6.2 shall be levied as an Other Charge pursuant to Section 12.4.

Article 12. Association Finances.

12.1. Association Expenses.

Association assessments consist of the following:

(a) Base assessments, consisting of common charges assessed equally against each Lot, contained in an annual or supplemental budget.

(b) Special Assessments, to pay for common charges unanticipated in the annual budget, assessed equally against each Lot;

(c) Other Charges, Service Fees, Use and Consumption Fees, assessed for the purposes set out in Section 12.5.

Except as this Article and other provisions of the Governing Documents otherwise specifically provide, all expenses incurred by the Association in connection with the ownership, maintenance, improvement, and operation of the Common Area and the other responsibilities set out in this Declaration, and otherwise for the general benefit of the Owners, are considered "Common Expenses." Common Expenses include such operating reserves and reserves for repair and replacement of any capital items for which the Association has responsibility, as the Board finds necessary or appropriate in accordance with this Declaration.

Expenses associated with the provision of common sewer from community septic systems on the Property, shall be assessed against all Lots, whether or not they connected to the community septic system.

Common Expenses shall not include any expenses incurred during the Declarant Control Period for initial development or original construction costs unless Owners entitled to cast a majority of the total votes in the Association approve such expenditure.

The characterization of a particular expense as a "Common Expense" shall not preclude the Association from seeking reimbursement for, or a contribution toward, such expenses from other Persons who may be responsible for the expenses incurred or for sharing such expenses pursuant to this Declaration, any Supplement, or any other recorded covenants or agreements.

The requirement in this Section 12.1 that the Common Expenses allocated to all Lots include the costs to maintain, repair, and replace the Common Area shall not be amended without the consent of the Town of Wells or the Maine Department of Environmental Protection.

12.2. Obligation to pay Assessments.

The Declarant hereby establishes and the Association is hereby authorized to levy assessments as provided for in this Article and elsewhere in the Governing Documents. Except with respect to Lots owned by the Declarant, the obligation to pay assessments shall commence as to each Lot on the first day of the month following the date on which the Lot is made subject to this Declaration or the effective date of the Association's first budget, whichever is later. The Base Assessment levied on each Lot for the year in which the Lot is made subject to this Declaration shall be prorated according to the number of months remaining in the fiscal year at the time the Lot becomes subject to the Declaration.

Assessments shall be paid in such manner and on such dates as the Board may establish. The Board may require advance payment of assessments at closing of the transfer of title to a Lot and impose special requirements for Owners with a history of delinquent payment. If the Board so elects, assessments may be paid in two or more installments. The Base Assessment is an annual assessment due and payable in advance on the first day of each fiscal year; however, the Board may permit such assessment to be paid in installments. If any Owner is delinquent in paying any assessments or other

charges levied on his Lot, the Board may revoke such Owner's privilege of paying in installments and require the outstanding balance on all assessments to be paid in full immediately.

Personal Obligation. By accepting a deed or entering into a recorded contract to purchase any Lot, each Owner covenants and agrees to pay all assessments authorized in the Governing Documents. All assessments, together with interest (computed from its due date at a rate of 18% per annum or such higher rate as the Board may establish, subject to the limitations of Maine law), late charges as determined by Board resolution, costs, and reasonable attorneys' fees, shall be the personal obligation of each Owner and a lien upon each Lot until paid in full. Upon a transfer of title to a Lot, the grantee shall be jointly and severally liable for any assessments and other charges due at the time of conveyance.

The Board's failure to fix assessment amounts or rates or to deliver or mail each Owner an assessment notice shall not be deemed a waiver, modification, or a release of any Owner from the obligation to pay assessments. In such event, each Owner shall continue to pay Base Assessments at the rate of assessment established for the last year for which an assessment was made, if any, until a new assessment is levied, at which time the Association may retroactively assess any shortfall.

No Owner may exempt himself or herself from liability for assessments by non-use of Common Area, abandonment of his or her Lot, or non-use of services provided to the Lots. The obligation to pay assessments is a separate and independent covenant on the part of each Owner. No diminution or abatement of assessments or set-off shall be claimed or allowed for any alleged failure of the Association or Board to take some action or perform some function required of it, or for inconvenience or discomfort arising from the making of repairs or improvements, or from any other action it takes.

12.2a. Annual Budget Development and Ratification.

Preparation of Budget. At least 60 days before the beginning of each fiscal year, the Board shall prepare a budget of the estimated Common Expenses for the coming year. The estimated expenses shall include, in addition to any operating reserves, a reasonable contribution to a reserve fund for repair and replacement of any capital items to be maintained as a Common Expense. In determining the amount of such reserve contribution, the Board shall take into account the number and nature of replaceable assets, the expected useful life of each, the expected repair or replacement cost, and the contribution required to fund the projected needs by annual contributions over the useful life of the asset.

The budget shall also reflect the sources and estimated amounts of funds to cover such expenses, which may include any surplus to be applied from prior years, any income expected from sources other than assessments levied against the Lots, and the amount to be generated through the levy of Base Assessments pursuant to Section 12.3.

Notice of Budget and Assessment; Right to Disapprove. Within 30 days after adoption by the Board of any budget, the Board shall send a summary of the proposed budget, together with notice of the amount of the Base Assessment to be levied pursuant to such budget, and the date of a meeting of the Owners to consider ratification of the budget to the Owner of each Lot responsible for a share of the expenses covered by such budget. The meeting of the Owners to consider the budget shall occur not less than 10 nor more than 60 days after mailing of the budget summary. The Common Expense budget shall automatically be adopted and become effective on the date stated in the notice unless disapproved at a meeting by Members entitled to cast at least 75% of the total

votes in the Association and by the Declarant, during the Development and Sale Period.

If any proposed budget is disapproved or the Board fails for any reason to determine the budget for any year, then the budget most recently in effect shall continue in effect until a new budget is ratified.

Budget Revisions. The Board may revise the budget and adjust the Base Assessment any time during the year, subject to the same notice requirements and rights to disapprove set forth in this Section.

Surplus Funds. Any surplus funds of the Association remaining after payment of or provision for all Association expenses and any budgeted allocation to reserves may be used to supplement reserves or taken into account in the income portion of the budget pursuant to which the funds were collected in order to reduce the assessments that would otherwise be levied pursuant to that budget in the succeeding year, as the Board deems appropriate.

12.3 Base Assessments.

Calculation of Base Assessments. The total budgeted Common Expenses, less any surplus in the Common Expense budget from prior years and any income anticipated from sources other than assessments against the Lots, shall be allocated among all Lots subject to assessment and levied as a "Base Assessment." Base Assessments shall be levied at a uniform rate per Lot subject to assessment under Section 12.5, except that Lots which the Declarant owns shall not be assessed any portion of the Base Assessment levied to fund contributions to reserve funds, and shall not be assessed at all during any period that the Declarant has elected to fund deficits pursuant to Section 12.6.

The Declarant may, but shall not: be obligated to, reduce the Base Assessment for any fiscal year by payment of a subsidy (in addition to any amounts paid by the Declarant under Section 12.6. Any such subsidy may be treated as a contribution, an advance against future assessments due from the Declarant, or a loan, in the Declarant's discretion. Any such subsidy and the characterization thereof shall be conspicuously disclosed as a line item in the income portion of the budget. Payment of such subsidy in any year shall not obligate the Declarant to continue payment of such subsidy in future years, unless otherwise provided in a written agreement between the Association and the Declarant.

12.4. Special Assessments.

The Association may levy "Special Assessments" to cover Common Expenses that are non-routine, unanticipated, or in excess of those anticipated in the applicable budget. Special assessments shall be payable in such manner and at such times as the Board determines and may be payable in installments extending beyond the fiscal year in which the Special Assessment is approved. Within 30 days after adoption of any special assessment, the board shall provide a summary to all the Lot owners, and shall set a date for a meeting of the Lot owners to consider ratification of the special assessment not less than 10 nor more than 30 days after mailing of the summary.

If the special assessment is to be paid entirely by Owners within the current budget year, it is ratified unless a majority of all the Owners reject it, whether or not a quorum is present.

If the special assessment is to be paid, in whole or in part, beyond the current budget year, it is not ratified unless a majority of all the Lot owners accept it.

Notwithstanding the above, if the amount of the special assessment does not exceed 2 months' common charges and the board determines that the assessment is necessary to meet an emergency, the board may make the special assessment immediately in accordance with the terms of the board's vote, without ratification by Lot owners.

Special Assessments shall be allocated equally among all such Lots.

During the Development and Sale Period, any special assessment shall also be subject to the Declarant's written consent.

12.5. Other Charges.

The term "Other Charge," or "Charge" may refer generally to service, use, consumption and other charges which are not levied generally against all Lots.

The Association may levy Other Charges against a particular Lot as follows:

(a) to cover the costs, including overhead and administrative costs, of providing services to the Lot upon request of the Owner pursuant to any menu of optional services which the Association may offer (which might include the items identified in Section 10.1). Other Charges for optional services may be levied in advance of the provision of the requested service;

(b) to cover the costs, including overhead and administrative costs, of providing other services to the Lot owner, as requested by such Owner;

(c) to cover costs which, in the opinion of the Board, and after notice and an opportunity to be heard, uniquely and significantly benefit one or more Lots;

(d) to cover costs incurred in bringing the Lot into compliance with the Governing Documents or costs incurred as a consequence of the conduct of the Owner or occupants, their agents, contractors, employees, licensees, invitees, or guests; however, the Board shall give the Owner prior written notice and an opportunity for a hearing in accordance with the Bylaws before levying any Other Charges under this subsection;

(e) to cover any deductible assessed against the Owners pursuant to Section 11.2; and

(f) to cover any other amounts that the Governing Documents authorize the Association to charge to a particular Owner or levy against any particular Lot.

(g) to provide sewer services from community sewer facilities, based on usage as the board may determine by a schedule of fees. These charges may be subcategorized into charges for capital expenditures, maintenance, consumption or other categories, and separately assessed under different formulas against Owners.

(h) other use, consumption, or activity fees to any Person using Association services or facilities. The Board may determine the amount and method of determining such fees. Different fees may be charged to different classes of users (e.g., Owners and non-Owners).

12.6. Declarant Financial Obligations to Association.

The Declarant shall be liable for assessments on any Lots it owns that are subject to assessment under this section, except that during the Development and Sale Period, the Declarant may satisfy its obligation to pay Base Assessments, and Special Assessments for Common Expenses on Lots it owns either (i) by paying such assessments (exclusive of any portion levied to fund contributions to reserve funds) in the same manner as any other Owner, or (ii) by paying any shortfall in actual expenses (excluding contributions to reserve funds) under the Common Expense budget resulting

from events other than failure of other Owners to pay their assessments, the amount of any such shortfall determined after allocating to reserves that portion of the assessments actually collected from other Owners for purposes of funding reserve accounts.

Regardless of the Declarant's election under this section, any of the Declarant's financial obligations to the Association may be satisfied in the form of cash or by "in kind" contributions of services or materials, or by a combination of these.

12.7. Lien for Assessments.

Existence of Lien. The Association shall have a lien against each Lot to secure payment of assessments, as well as interest, late charges (subject to the limitations of Maine law), and costs of collection (including attorney's fees and expenses). Such lien shall be superior to all other liens, except (i) liens and encumbrances recorded prior to this Declaration and which the Association has assumed or taken subject to; (ii) the liens of all real estate taxes and other governmental assessments or charges, and (iii) the lien or charge of any first mortgage made in good faith and for value having first priority over any other Mortgages on the Lot and recorded prior to the assessment becoming delinquent.

The Association may, as further evidence and notice of the lien, execute and record a document setting forth as to any Lot the amount of the delinquent sums due the Association at the time such document is executed and the fact that a lien exists to secure the repayment thereof. However, the failure of the Association to execute and record any such document shall not affect the validity, enforceability, or priority of the lien.

Enforcement of Lien. The Association may foreclose its lien in the same manner as a mortgage, bid for the Lot at the foreclosure sale and acquire, hold, lease, mortgage, and convey it, subject to the Owner's right of redemption, if any, under Maine law. While a Lot is owned by the Association following foreclosure: (i) no right to vote shall be exercised on its behalf; (ii) no assessment shall be levied on it; and (iii) each other Lot shall be charged, in addition to its usual assessment, its pro rata share of the assessment that would have been charged such Lot had it not been acquired by the Association. The Association may sue for unpaid assessments and other charges authorized hereunder without foreclosing or waiving the lien securing the same, in addition to pursuing any and all remedies allowed by law to enforce the lien.

Effect of Sale or Transfer. Sale or transfer of any Lot shall not affect the assessment lien or relieve such Lot from the lien for any subsequent assessments. However, the sale or transfer pursuant to foreclosure of a first Mortgage having priority over the Association's lien pursuant to Section 12.7(a) shall extinguish the lien as to any installments of such assessments due prior to the Mortgagee's foreclosure. The subsequent Owner shall not be personally liable for assessments due prior to such acquisition of title. Such unpaid assessments shall be deemed to be Common Expenses collectible from Owners of all Lots subject to assessment under Section 12.5, including such acquirer, its successors and assigns.

12.8. Exempt Property.

The following property shall be exempt from payment of Base Assessments and Special Assessments:

(a) All Common Area and such portions of the property owned by the Declarant or a Declarant

Affiliate; and

(b) Any property dedicated to and accepted by any governmental authority or public utility.

*12.9. Capitalization of Association***.**

The first Owner of each Lot other than the Declarant, a Declarant Affiliate, or a Builder designated by the Declarant, shall pay to the Association, immediately upon taking title to the Lot:

(a) a Wire Road Subdivision community origination fee in the amount of $**500,** for use in funding initial start-up expenses, operating expenses, and other expenses the Association incurs pursuant to this Declaration and the Bylaws, or for helping to fund reserves, in the Board's discretion, plus

(b) a $100 contribution to a reserve fund for repairs and replacements.

These amounts shall be one-time payments in addition to, not in lieu of, the annual Base Assessment levied on the Lot and shall not be considered an advance payment of such assessments.

12.10. Resale Certificates.

Within 10 days after receipt of a written request from any Owner, Mortgagee, prospective Mortgagee, or prospective purchaser of a Lot, The Association shall deliver a Resale Certificate, containing substantially the same information required of Resale Certificates issued under Section 1604-108 of the Maine Condominium Act. A purchaser is not liable for any unpaid assessment or fee greater than the amount set forth in the certificate prepared by the association. The Association may require the payment of a reasonable processing fee for issuance of such statement. Such statement shall be binding upon the Association as to Persons who rely thereon in good faith.

Article 13. Easements; Restrictions.

13.1. Easements in Common Area.

The Declarant grants to each Owner a nonexclusive right and easement of use, access, and enjoyment in and to the Common Area, subject to:

(a) the Governing Documents and any other applicable covenants;

(b) any restrictions or limitations contained in any deed conveying such property to the Association;

(c) the Board's right to:

(i) adopt rules regulating Common Area use and enjoyment;

(ii)dedicate or transfer all or any part of the Common Area, subject to such approval requirements as may be set forth in this Declaration;

(d) the requirement of the Wells Planning Board that use of portions of the Common Area designated as Open Space be limited to passive recreation.

Any Owner may extend his or her right of use and enjoyment to the members of his or her family, lessees, and social invitees, as applicable, subject to reasonable Board regulation. An Owner who leases his or her Lot shall be deemed to have assigned all such rights to the lessee of such Lot for the period of the lease.

13.2. Easements of Encroachment.

The Declarant grants reciprocal appurtenant easements of encroachment, and for maintenance and use of any permitted encroachment, between each Lot and any adjacent Common Area and between adjacent Lots. A permitted encroachment is a structure or fixture that extends unintentionally from one person's property onto another's a distance of not more than one foot, as measured from any point on the common boundary along a line perpendicular to such boundary. An encroachment easement shall not exist if the encroachment results from willful and knowing conduct on the part of, or with the knowledge and consent of, the Person claiming the benefit of such easement.

13.3. Easements for Utilities, Etc.

(a) Installation and Maintenance. The Declarant reserves for itself, its successors, assigns, and designees, perpetual exclusive easements throughout Wire Road Subdivision (but not through a structure) for the purpose of:

(i) installing utilities and infrastructure, security and similar systems, and drainage systems to serve Wire Road Subdivision;

(ii) installing walkways, pathways and trails, streetlights, and signage on property the Declarant or the Association owns or within public rights-of-way or easements reserved for such purpose on a recorded plat;

(iii) inspecting, maintaining, repairing, and replace the utilities, infrastructure, and other improvements described above; and

(iv) access to read, maintain, and repair utility meters.

Notwithstanding the above, the Declarant reserves the right to deny access to any utility or service provider, to the extent permitted by law, and to condition such access on negotiated terms.

(b) Specific Easements. The Declarant also reserves the non-exclusive right and power to grant and record such specific easements, consistent with Section 13.3(a), as it deems necessary or appropriate to develop the property described in Exhibit "A". The location of the specific easement shall be subject to the written approval of the Owner of the burdened property, which approval shall not unreasonably be withheld, delayed, or conditioned.

(c) Minimal Interference. All work associated with the exercise of the easements described in subsections (a) and (b) of this Section shall be performed so as to minimize interference with the use and enjoyment of the property burdened by the easement. Upon completion of the work, the Person exercising the easement shall restore the property, to the extent reasonably possible, to the condition existing prior to the commencement of the work. The exercise of these easements shall not extend to permitting entry into the structures, nor shall it unreasonably interfere with its use, and, except in an emergency, entry onto any Lot shall be made only after reasonable notice to the Owner or occupant.

13.4. Easements to Serve Additional Property.

The Declarant reserves for itself and its duly authorized agents, successors, assigns, and Mortgagees, an easement over the road easements shown on Plans of the Property for the purposes

of enjoyment, use, access, and development of adjacent or nearby property. This easement includes, but is not limited to, a right of ingress and egress, for construction of roads and for connecting and installing utilities on such property. The Person exercising such easement rights shall be responsible for any damage caused to the Common Area as a result of their actions in connection with development of such property.

If the above easement grants permanent access to any property which is not submitted to this Declaration, the Declarant, or its successors or assigns, shall enter into a reasonable agreement with the Association to share the cost of maintenance that the Association provides for the benefit of the easement holder. The shared maintenance costs may include maintenance to or along any roadway providing access to the benefited property.

13.5. Easements for Maintenance, Emergency, and Enforcement.

The Association shall have the right, but not the obligation, to enter upon any Lot for emergency, security, and safety reasons, to perform maintenance, to inspect for compliance with the Governing Documents, and to enforce the Governing Documents. Any member of the Board and its duly authorized agents and assignees and all emergency personnel in the performance of their duties may exercise such right. Except in an emergency situation, entry shall only be during reasonable hours and after notice to the Owner.

13.6. Easements for Pond Maintenance and Flood Water.

The Declarant reserves for itself, the Association, and their successors, assigns, and designees, a perpetual, nonexclusive right and easement of access over the Common Area and Lots (but not the dwellings thereon) to the wet pond in order to perform maintenance and repair; remove dead or diseased trees, shrubs, and plants; and control any condition or remove any thing that constitutes a potential health or safety hazard. All persons entitled to exercise this easement shall use reasonable care in and repair any damage resulting from the intentional exercise of such easement. Nothing herein shall be construed to make the Declarant, the Association, or any other Person liable for damage resulting from flooding due to weather events or other natural occurrences.

13.6.1. Forested, No Disturbance Storm Buffer.

The area designated for forested, stormwater buffer on the Plans is restricted by a separate deed restriction.

13.7. Temporary Right and Easement for Service to Lots.

The Declarant reserves for itself, its agents, successors, and assigns, and any Builder whom the Declarant may designate, a temporary easement for access over and upon the front, side and rear yards of each Lot as the Declarant or Builder may determine necessary or convenient in the course of construction, landscaping, repair, and service to adjacent Lots.

The temporary right and easement under this Section shall terminate, as to each Lot, 60 days after expiration of the last to expire warranty period for the adjacent Lots, as established by the Builder's limited warranty provided to the original purchaser.

13.8. Easements for Dry Hydrants.

The Town of Wells is granted an easement for access to any dry hydrants built or to be built on the Premises.

13.9. Permanent Dedication of Open Space.

The Open Space portion of the Property is hereby permanently dedicated as Open Space, as that term is defined in the Wells Land Use Ordinance, whether owned by the Association or the Town of Wells. It shall be preserved in its natural condition except where approved to be altered, as shown on the Plans. Unless otherwise indicated on the Plans, use of the Open Space is limited to passive recreation.

Any change in the use of the Open Space requires approval of the Wells Planning Board.

13.10. Town Access over Roads and the Open Space.

The Town of Wells and its various departments shall have a permanent right of access over the private roads and Open Space to respond to emergencies and to perform other necessary functions of government.

Article 13-A. Compliance with Governmental Approvals.

13-A.1. Compliance with Density Bonus Requirements.

Density bonus provisions of the Wells Land Use Code allow the Property to have more lots than would otherwise be allowed. Ch. 145-49D (1) of Wells Land Use Code provides that at least 50% of the total area of the Property shall consist of Open Space, as defined in the Wells Land Use Code, in perpetuity, as required by Chapter 202 12B of the Wells Land Use Code, as that term is used in Chapter 145-49 D (1) of the Code, and as depicted on the Plans recorded in the York County Registry of Deeds at Plan Book ____, page ____.

Accordingly, no construction, development or other activity which would reduce the total Open Space area to less than 50% shall be permitted.

Because the Wells Planning Board allowed density of dwelling units on the Property to be increased in reliance on these provisions, no amendment to Section 13-A.2 is valid without the written approval of the Wells Planning Board.

13-A. 2. Other Governmental Approvals and Permits.

The Property is subject to approvals and permits granted by the Army Corps of Engineers, and the Maine Department of Environmental Protections, as applicable and as they may be modified from time to time. Each Owner and the Association must comply with them. The permits and

approvals contain specific provisions and conditions. The Association has the affirmative duty of complying with them and to enforce compliance by others. These duties include, but are not limited to:

(a) maintenance and inspection of the Stormwater Management System, and periodic reports as required by the Inspection and Maintenance Plan.

(b) compliance with requirements and conditions of approval contained in Maine Department of Environmental Protection approvals or permits under the Maine Site Location of Development Act and the Natural Resources Protection Act.

(c) compliance with any approvals or permits by the Army Corps of Engineers applicable to the Property.

This Section 13-A.2 may not be amended without approval from the Maine Department of Environmental Protection or the Army Corps of Engineers, as the case may be.

Article 14. Disclosures and Waivers.

14.1. Changes in Plan.

Each Owner agrees that the Association shall not engage in, or use Association funds to support, any protest, challenge, or other form of objection to changes in uses or density of property within Wire Road Subdivision, or changes in the Plan as it relates to property outside Wire Road Subdivision, without the Declarant's prior written consent.

Article 15. Rights of Lenders.

The following provisions are for the benefit of holders, insurers and guarantors of first Mortgages on Lots in Wire Road Subdivision.

15.1. Notices of Action.

An institutional holder, insurer, or guarantor of a first Mortgage which provides a written request to the Association (such request to state the name and address of such holder, insurer, or guarantor and the street address of the Lot to which its Mortgage relates, thereby becoming an "Eligible Holder"), will be entitled to timely written notice of:

(a) Any condemnation loss or any casualty loss which affects a material portion of Wire Road Subdivision or which affects any Lot on which there is a first Mortgage held, insured, or guaranteed by such Eligible Holder; and

(b) Any delinquency in the payment of assessments or charges owed by a Lot Owner subject to the Mortgage of such Eligible Holder, where such delinquency has continued for a period of 60 days, or any other violation of the Governing Documents relating to such Lot or the Owner or occupant which is not cured within 60 days; or

(c) Any lapse, cancellation, or material modification of any insurance policy maintained by the Association.

15.2. No Priority.

No provision of this Declaration or the Bylaws gives or shall be construed as giving any Owner or other party priority over any rights of the first Mortgagee of any Lot in the case of distribution to such Owner of insurance proceeds or condemnation awards for losses to or a taking of the Common Area.

15.3. Notice to Association.

Upon request, each Owner shall furnish to the Association the name and address of the holder of any Mortgage encumbering such Owner's Lot.

15.4. Failure of Mortgagee to Respond.

Any Mortgagee who receives a written request from the Board to respond to or consent to any action shall be deemed to have approved such action if the Association does not receive a written response from the Mortgagee within 30 days of the date of the Association's request, provided such request is delivered to the Mortgagee by certified or registered mail, return receipt requested.

Article 16. Reserved.

[The Declarant may or may not reserve the right to add adjacent property it owns to the provisions of this Declaration and will supply additional provisions in this section, if that is the case.]

Article 17. Additional Rights Reserved to the Declarant.

17.1. Special Development Rights.

Subject to requirements of governmental approvals and permits, including the Wells, Planning Board, the Declarant reserves the right, during the Development and Sale Period, to:

(a) create Lots, Common Areas, and to designate roadways, within any portion of the Community which it owns;

(b) subdivide or combine any Lots which it owns in order to create larger or additional Lots, or Common Areas;

(c) convert any Lot which it owns into Common Area or roadways;

(d) adjust the boundaries of any Lots that it owns and any Common Area (with the approval of the Wells Planning Board); and

(e) amend this Declaration or any Supplement to withdraw property from the community and the coverage of this Declaration, provided that such property has not been improved with a dwelling.

Any such amendment shall not require the consent of any Person other than the Owner(s) of the property to be withdrawn, if not the Declarant. If the property is Common Area, the Association shall consent to such withdrawal.

17.2. Marketing and Sales Activities.

Notwithstanding anything in the Governing Documents to the contrary, during the Development and Sale Period, the Declarant and its designees or assigns may construct, use, and maintain such facilities and conduct such activities upon portions of the Common Area and other property they own as, in the Declarant's opinion, may reasonably be required, convenient, or incidental to the construction or sale of Lots. Such permitted facilities and activities shall include business offices, signs, flags (whether hung from flag poles or attached to a structure), model homes, sales offices, parking facilities, exterior lighting features or displays, and special events. Declarant and authorized Builders whom the Declarant may designate shall have easements for access to and use of such facilities at no charge.

17.3. Access for Development Purposes.

During the Development and Sale Period, the Declarant and its employees, agents, and designees shall have a right of access and use and an easement over and upon all of the Common Area and roadways within the Community for the purpose of:

(a) exercising any rights reserved to the Declarant pursuant to this Declaration, including the rights set forth in Sections 17.I and 17.2; and

(b) making, constructing, and installing any improvements indicated on recorded subdivision maps or plats of the Community and such other improvements to the Common Area and to the Exhibit "A-1" property as it deems appropriate; and

(c) making repairs or correcting any condition on the Common Area or any Lot or dwelling.

17.4. Right to Approve Changes in Community Standards.

During the Development and Sale Period, no amendment to or modification of any Rules or Design Guidelines shall be effective without prior notice to and the written approval of the Declarant.

17.5. Additional Covenants and Restrictions.

During the Development and Sale Period, no one other than the Declarant or a Declarant Affiliate may record any additional covenants or restrictions affecting any portion of the Community without the Declarant's written consent. Any instrument recorded without the required consent shall be void and of no force and effect.

17.6. Reserved.

17.7. Community Systems.

The Declarant reserves for itself, Declarant Affiliates, and their respective successors and assigns, a perpetual right and easement over all of the property in Wire Road Subdivision to install and operate such community systems (except community sewer systems) as the Declarant, in its discretion, deems appropriate to serve any portion of the community. Such right shall include, without limitation, the Declarant's right to select and contract with companies licensed to provide telecommunications, cable television, and other Community Systems services in the area. The Declarant also has the right to charge or authorize any provider to charge individual users a reasonable fee, not to exceed the maximum allowable charge for such service, as defined from time to time by the laws, rules, and regulations of any government authority having jurisdiction.

Notwithstanding the above, there is no guarantee or representation that any particular community system will be made available.

17.8. Easement to Inspect and Right to Correct.

The Declarant reserves for itself, Builders, and others it may designate, the right, but not the obligation, to inspect, monitor, test, redesign, and correct any structure, improvement, or condition which may exist on any portion of the property within Wire Road Subdivision, and to perform any work that may be required by any governmental agency or body, and a perpetual nonexclusive easement of access throughout Wire Road Subdivision to the extent reasonably necessary to exercise such right. Except in an emergency, entry shall be only after reasonable notice to the Owner, and no entry into an enclosed structure shall be permitted without the Owner's consent. The person exercising this easement shall promptly repair, at such person's own expense, any damage he or she causes. Nothing in this paragraph shall relieve an Owner of the responsibility for the maintenance and repair of his or her Lot or dwelling unit.

The Declarant, or someone it designates, may enter any Owner's property to inspect and correct problems with the Lot or dwelling unit. The Declarant must give the Owner prior notice, unless it is an emergency.

17.9. Right to Notice of Design or Construction Claims.

No Person shall retain an expert for the purpose of inspecting the design or construction of any structures or improvements within Wire Road Subdivision in connection with or in anticipation of any potential or pending claim, demand, or litigation involving such design or construction unless the Declarant and any Builder involved in the design or construction have been first notified in writing and given an opportunity to meet with the owner of the property to discuss the owner's concerns and conduct their own inspection.

17.10. Right to Transfer or Assign the Declarant's Rights.

The Declarant may transfer any or all of the Declarant's special rights and obligations set forth in this Declaration or the Bylaws in whole or in part, temporarily or permanently, to other Persons. However, such a transfer shall not reduce an obligation or enlarge a right beyond that which Declarant has under this Declaration or the Bylaws. Any transferee shall be subject to the provisions of this Declaration. No transfer or assignment of the Declarant's status as the Declarant or as the

Declarant member shall be effective unless it is in a recorded instrument which the Declarant has signed. The Declarant may permit other Persons to exercise, on a one-time or limited basis, any right reserved to the Declarant in this Declaration where the Declarant does not intend to transfer such right in its entirety. In such case, it shall not be necessary to record any written assignment unless desired to evidence the Declarant's consent to such exercise.

17.11. Termination of Rights.

Except as otherwise specified above, the rights reserved to the Declarant in this Article shall terminate on the earlier of (a) termination of the Development and Sale Period; or (b) the Declarant's recording of a written statement that all sales activity has ceased.

Article 18. Dispute Resolution and Limitation on Litigation.

18.1. Agreement to Encourage Resolution of Disputes Without Litigation.

Bound Parties. The Declarant, the Association and its officers, directors, and committee members, all Owners and other Persons subject to this Declaration, and any Person not otherwise subject to this Declaration who agrees to submit to this Article (collectively, ''Bound Parties"), agree that it is in the best interest of all concerned to encourage the amicable resolution of disputes involving the community without the emotional and financial costs of litigation. Accordingly, each Bound Party agrees not to file suit in any court with respect to a Claim described in subsection (b), unless and until it has first submitted such Claim to the alternative dispute resolution procedures set forth in Section 18.2 in a good faith effort to resolve such Claim.

Claims. As used in this Article, the term "Claim" shall refer to any claim, grievance, or dispute arising out of or relating to:

(a) the interpretation, application, or enforcement of the Governing Documents;

(b) the rights, obligations, and duties of any Bound Party under the Governing Documents; or

(c) the design or construction of improvements within the Community, other than matters of aesthetic judgment under Article 5, which shall not be subject to review;

Notwithstanding the above, the following shall not be considered "Claims" unless all parties to the matter otherwise agree to submit the matter to the procedures set forth in Section 18.2:

(a) any suit by the Association to collect assessments or other amounts due from any Owner;

(b) any suit by the Association to obtain a temporary restraining order (or emergency equitable relief) and such ancillary relief as the court may deem necessary in order to maintain the status quo and preserve the Association's ability to enforce the provisions of this Declaration relating to creation and maintenance of community standards;

(c) any suit that does not include the Declarant, a Declarant Affiliate, or the Association as a party, if such suit asserts a Claim that would constitute a cause of action independent of the Governing Documents;

(d) any dispute which affects the material rights or obligations of a party who is not a Bound Party and has not agreed, and does not agree, to submit to the procedures set forth in Section 18.2;

(e) any suit as to which any applicable statute of limitations would expire within 180 days of giving the Notice required by Section 18.2, unless the party or parties against whom the Claim is made agree to toll, or extend, the Claim's statute of limitations to comply with this Article; and

(f) any suit by the Association to enforce the Governing Documents where the Association has given the violator notice and either a hearing or an opportunity to cure the violation, or both, prior to the Association filing suit.

18.2. Dispute Resolution Procedures.

Notice. The Bound Party asserting a Claim ("Claimant") against another Bound Party ("Respondent") shall give written notice (''Notice") by mail or personal delivery to each Respondent and to the Board, stating plainly and concisely:

the Claimant's desire to meet with the Respondent to discuss, in good faith, ways to resolve the Claim.

Negotiation. The Claimant and Respondent shall make every reasonable effort to meet in person and confer for the purpose of resolving the Claim by good faith negotiation. If requested in writing, accompanied by a copy of the Notice, the Board may appoint a representative to assist the parties in negotiating a resolution of the Claim.

Mediation. If the parties have not resolved the Claim through negotiation within 30 days of the date of the Notice (or within such other agreed upon period), the Claimant shall have 30 additional days to submit the Claim to mediation with an entity designated by the Association (if the Association is not a party to the Claim) or to an independent agency providing dispute resolution services in the vicinity of York County, Maine. Each Bound Party shall present the mediator with a written summary of the Claim.

If the Claimant does not submit the Claim to mediation within such time, or does not appear for and participate in good faith in the mediation when scheduled, the Claimant shall be deemed to have waived the Claim, and the Respondent shall be relieved of any and all liability to the Claimant (but not third par- ties) on account of such Claim.

If the parties do not settle the Claim within 30 days after submission of the matter to mediation, or within such time as determined reasonable by the mediator, the mediator shall issue a notice of termination of the mediation proceedings indicating that the parties are at an impasse and the date that mediation was terminated. The Claimant shall thereafter be entitled to file suit or to initiate administrative proceedings on the Claim, as appropriate, except as otherwise provided in Section 18.3.

Each Bound Party shall bear its own costs of the mediation, including attorneys' fees, and each Party shall pay an equal share of the mediator's fees.

Settlement. Any settlement of the Claim through negotiation or mediation shall be documented in writing and signed by the parties. If any party thereafter fails to abide by the terms of such agreement, then any other party may file suit or initiate administrative proceedings to enforce such agreement without the need to comply again with the procedures set forth in this Section. In such event, the party taking action to enforce the agreement or award shall, upon prevailing, be entitled to recover from the noncomplying party (or if more than one non-complying party, from all such parties in equal proportions) all costs incurred in enforcing such agreement or award, including, without limitation, attorney’s fees and court costs.

18.3. Initiation of Litigation by Association.

Membership Approval. In addition to compliance with the foregoing alternative dispute

resolution procedures, if applicable, the Association shall not initiate any judicial or administrative proceeding unless first approved by a vote of Members entitled to cast at least 75% of the total votes in the Association, except that no such approval shall be required for actions or proceedings:

(a) initiated during the Declarant Control Period;

(b) initiated to enforce the provisions of the Governing Documents, including collection of assessments and foreclosure of liens;

(c) initiated to challenge ad Valorem taxation or condemnation proceedings;

(d) initiated against any contractor, vendor, or supplier of goods or services, other than the Declarant or a Builder, arising out of a contract for services or supplies; or

(d) to defend claims filed against the Association or to assert counterclaims in proceedings instituted against it.

This subsection (a) shall not be amended unless such amendment is approved by the same percentage of votes necessary to institute proceedings.

Mandatory and Binding Arbitration. Notwithstanding any other provision of this Declaration, any claim by the Association or any Owner or group of Owners arising out of alleged defects in the Common Areas or other portions of the Area which the Association is charged with maintaining, that is not resolved pursuant to the procedures set forth in by mediation shall be submitted to final and binding arbitration in accordance with this section. The Claimant shall have 30 days following termination of mediation pursuant to Section 18.2 to submit the claim to arbitration under the Uniform Arbitration Act, 14 M.R.S., Section 5927 et seq. or the claim shall be deemed abandoned and the respondent shall be released and discharged from any and all liability to Claimant arising out of such claim; however, nothing in this section shall release or discharge the Respondent from any liability to persons not a party to the foregoing proceedings. Unless the parties agree otherwise, there shall be one arbitrator. The arbitrator may grant any remedy or relief that the arbitrator considers just and equitable. The decision of the arbitrator shall be final, and judgment upon the arbitral award may be entered in any court having jurisdiction thereof.

Each Owner, by accepting a deed to a Lot, waives any right to have a claim within the scope of this section resolved by judicial proceedings, including any right to a trial by jury. This section is an agreement of the bound parties to arbitrate the claims described in this section and may be specifically enforced by any bound party.

If any party commences litigation in violation of this Section, then upon the other party's written objection, the party commencing litigation shall immediately stipulate to the dismissal of that litigation without prejudice. If the party commencing the litigation fails to make that stipulation within five days after the filing of such written objection, that party shall reimburse the other parties for their costs and expenses, including reasonable attorneys' fees, incurred in seeking a dismissal or stay of that litigation if such dis- missal or stay is obtained.

Good Faith; Fees. The parties shall participate in good faith in all mediation and arbitration proceedings. The venue of the mediation or arbitration proceeding shall be determined by the mediator or arbitrator, as the case may be. The fees and expenses of the mediation or arbitration proceeding (including the fee of the mediator and arbitrator) shall be shared equally by the parties. Each party shall pay its own expenses (including without limitation attorneys' fees and costs and expenses of preparation and presentation of proofs), except that the prevailing party in any arbitration proceeding shall be entitled to an award of reasonable attorneys' fees and costs.

Article 19. Changes in the Common Area.

19.1. Condemnation.

If any part of the Common Area is taken by any authority having the power of condemnation or eminent domain, or conveyed by the Association in lieu of and under threat of condemnation with such approval as may be required under Section 19.3, each Owner shall be entitled to written notice of such taking or conveyance prior to disbursement of any condemnation award or proceeds from such conveyance. Such award or proceeds shall be payable to the Association to be disbursed as follows:

If the taking or conveyance involves a portion of the Common Area on which improvements have been constructed, the Association shall restore or replace such improvements on the remaining land included in the Common Area to the extent available, unless within 60 days after such taking the Declarant, during the Development and Sale Period, and Members entitled to cast at least 75% of the total votes in the Association shall otherwise agree. Any such construction shall be in accordance with plans approved by the Board.

If the taking or conveyance does not involve any improvements on the Common Area, if a decision is made not to repair or restore, or if net funds remain after any such restoration or replacement is complete, then such award or net funds shall be treated in the same manner as proceeds from the sale of Common Area under Section 19.3.

19.2. Partition.

Except as permitted in this Declaration, the Common Area shall remain undivided, and no Person shall bring any action to partition any portion of the Common Area without the written consent of all Owners and Mortgagees. This Section shall not prohibit the Board from acquiring and disposing of tangible personal property or from acquiring and disposing of real property that may or may not be subject to this Declaration, with such approval as may be required under Section 19.3.

19.3. Transfer, Mortgaging or Dedication of Common Areas.

The Association may transfer or dedicate portions of the Common Area to the Town of Wells or any local, state or federal governmental or quasi-governmental entity, may subject Common Area to a security interest, or may transfer or convey Common Area, upon the written direction of Members entitled to cast at least 67% of the total votes in the Association, the written consent of the Wells Planning Board and any other governmental entities having jurisdiction and, during the Development and Sale Period, the written consent of the Declarant.

The proceeds of sale or mortgaging of Common Area shall be an asset of the Association to be used as the Board determines, unless otherwise directed by Members at the time such sale or mortgage is authorized pursuant to this Section.

No conveyance or encumbrance of Common Area may deprive any Lot of rights of access or support.

Article 20. Termination and Amendment of this Declaration.

20.1. Term and Termination.

This Declaration shall be effective for a minimum of 30 years from the date it is recorded. After 30 years, this Declaration shall be renewed and extended automatically for successive 20 year periods unless at least 67% of the then Owners sign a document stating that the Declaration is terminated, the document is recorded and the Wells Planning Board approved the termination within the year before any extension. In such case, this Declaration shall terminate on the date specified in the termination document.

If any provision of this Declaration would be unlawful, void, or voidable by reason of any rule restricting the period of time that covenants can affect title to property, that provision shall expire 21 years after the death of the last survivor of the now living descendants of Elizabeth II, Queen of England.

This section shall not permit termination of any easement created in this Declaration without the consent of the holder of such easement.

20.2. Amendment.

By the Declarant. In addition to the specific amendment rights granted elsewhere in this Declaration, during the Declarant Control Period, the Declarant may unilaterally amend this Declaration for any purpose.

By the Board. The Board may, by at least a two-thirds vote of the directors, amend this Declaration to correct any error or omission required to conform this Declaration to the applicable provisions of Maine law, provided that the amendment does not materially or adversely affect the property rights of any Owner without the written consent of the affected Owner.

By the Owners. Except as otherwise specifically provided above or elsewhere in this Declaration, this Declaration may be amended only by the affirmative vote or written consent of Members entitled to cast not less than 67% of the total votes in the Association. During the Development and Sale Period, the Declarant's written consent shall also be required.

Any amendment pursuant to this Section shall be prepared, executed, certified and recorded on behalf of the Association by any officer designated for such purpose or, in the absence of such designation, by the Association's President.

Validity and Effective Date. Notwithstanding the above, the percentage of votes necessary to amend a specific clause shall not be less than the prescribed percentage of affirmative votes required for action to be taken under that clause.

No amendment may remove, revoke, or modify any right or privilege of the Declarant or the Declarant Member without the written consent of the Declarant or the Declarant Member, respectively (or the assignee of such right or privilege).

If an Owner consents to any amendment to this Declaration or the Bylaws, it will be conclusively presumed that such Owner has the authority to consent, and no contrary provision in any Mortgage or contract between the Owner and a third party will affect the validity of such amendment.

Any amendment shall become effective upon recording unless a later effective date is specified in the amendment.

No action to challenge the validity of an amendment may be brought more than two years after its recordation. In no event shall a change of conditions or circumstances operate to amend any provisions of this Declaration.

Exhibits. Exhibits "A" and "A-1" are incorporated by this reference and this Article shall govern amendment of those exhibits. Exhibit "C" is attached for informational purposes only and may be amended as provided in **Article 7** or pursuant to Section 20.2.

In witness of the foregoing, the Declarant has executed this Declaration this_____ day of _____, 2016

Highpine Properties, LLC

By_____

STATE OF MAINE, _____, 2016
County of York, ss.

Then personally appeared the above-named _____, _____ of Highpine Properties, LLC, and acknowledged the foregoing instrument to be his free act and deed in his said capacity, before me,

_____
Notary Public, Attorney at Law

(For Notaries), My commission expires _____.

_____
PRINT NAME

Exhibit A

Land Submitted to this Declaration

Highpine Properties, LLC

A certain tract or parcel of land located on the southwesterly side of Wire Road in Wells, York County, Maine, more particularly bounded and described as follows:

Beginning on the southwesterly sideline of Wire Road at a 1 3/4" iron pin at the northwesterly corner of land now or formerly of John L. Welch and Peggy L. Gagne;

Thence running S 53°10'40" W by land of said Welch and Gagne and land now or formerly of Flintlock Village, Inc, a distance of 1,400.97 feet to a stone field bound and land now or formerly of Josephine Matthews;

Thence running S 52°58'56" W by land of said Matthews a distance of 841.42 feet to a stone bound and land of Highpine Properties, LLC;

Thence running N 34°48'24" W by land of Highpine Properties, through a ¼" by 1 ¼" iron bar, a distance of 868.24 feet to a field stone bound;

Thence running N 39°55'25" W by land of Highpine Properties, through two ¼" by 1 ¼" iron bars, a distance of 937.91 feet to a stone bound at land of Highpine Properties;

Thence running N 51°24' 26" E by land of Highpine Properties a distance of 580.45 feet to a field stone bound;

Thence running N 45°46'52" W by land of Highpine Properties a distance of 597.99 feet to a ¾" iron rod at land of Tina Cole;

Thence running N 52°36'36" E by land of said Cole, through two 5/8" iron rods with Wayne Desper ID caps, a distance of 1069.64 feet to a 5/8" iron rod with Civil Consultants ID;

Thence running S 46°22'26" E by land now or formerly of Daniel Fraser and Pamela Fraser, a distance of 300.13 feet to a 5/8" iron rod and land now or formerly of Warren P. Dewilt and Abigail L. Dewilt;

Thence running S 53°37'25" W by land of Dewilt a distance of 165.00 feet to an iron pin;

Thence running S 46°22'17" E by land of Dewilt a distance of 200.05 feet to an iron rod;

Thence running N 52°37'25" E by land of Dewilt a distance of 495.16 feet to an iron pin located at the southeasterly sideline of Wire Road;

Thence running S 46°16'23" E along the southerly sideline of Wire Road a distance of 60.73 feet to an iron pin and land now or formerly of Brian D. Loucks and Connie D. Loucks;

Thence running N 52°37'25 E by said Loucks a distance of 503.31 feet to a 5/8" iron rod with PRS ID cap;

Thence running S 46°16’23” E by land of said Loucks, a distance of 200.50 feet to a 5/8” iron rod with PRS ID cap;

Thence running N 52°37 25” E by land of Loucks, a distance of 505.31 feet to a 5/8” iron rod with PRS id cap, set at the southerly sideline of Wire Road;

Thence running by the southerly sideline of Wire Road the following courses and distances to the point of beginning:

N 46° 21’44” W a distance of 679.14 feet;

N 45° 05’37” W, a distance of 628.94 feet;

N 43° 50’35” W, a distance of 383.58 feet.

Containing 100.26 acres, more or less.

EXHIBIT B. LOT OWNERS LIABILITY FOR ASSESSMENTS.

The liability for Base Assessments and Special Assessments shall be equal for each Lot. The percentage liability of each Lot is determined by a formula, the numerator of which is one, and the denominator of which is the total number of Lots for which a Certificate of Occupancy has been issued by the Town of Wells.

EXHIBIT C. INITIAL RULES

The following initial rules shall apply to all of Wire Road Subdivision until such time as they are modified pursuant to the Declaration.

The purpose of Rules is not to anticipate all acceptable or unacceptable behavior in advance and eliminate all improvements or activities that fall outside of "the norm." In fact, it is expressly intended that the Reviewer under Article 5, and the Board, as appropriate, have discretion to approve or disapprove items, or to enforce or not enforce technical violations of the Governing Documents, based upon aesthetic or other considerations consistent with the established guidelines. As such, while something may be approved or permitted for one Owner under one set of circumstances, the same thing may be disapproved for another Owner under a different set of circumstances. The exercise of discretion in approving or enforcement shall not be construed as a waiver of approval or enforcement rights, nor shall it preclude the Board from taking enforcement action in any appropriate circumstances.

1. General. The Lots within Wire Road Subdivision shall be used only for single family residential, recreational, and related purposes, which may include, without limitation, an information center and/or a sales office for any real estate broker retained by the Declarant or its designees to assist in the sale of property described in Exhibit "A"," offices for the Association and any property manager retained by the Association, or such other uses as authorized in Article 17, consistent with this Declaration and any Supplement.

Restricted Activities. Unless expressly authorized by, and then subject to such conditions as may be imposed by, the Board, the following activities are prohibited within Wire Road Subdivision, except to the extent undertaken by the Declarant in the course of development of property in Wire Road Subdivision:

(a) Parking of commercial vehicles or equipment, motor homes, recreational vehicles, golf carts, boats and other watercraft, trailers, stored vehicles, or inoperable vehicles in places other than enclosed garages; provided, construction, service and delivery vehicles shall be exempt from this provision during normal business hours for such period of time as is reasonably necessary to provide service or to make a delivery to a Lot or the Common Area;

(b) Raising, breeding, or keeping animals except that a reasonable number of dogs, cats, or other usual and common household pets may be permitted. However, those pets which are permitted to roam free, or, in the Board's sole discretion, make objectionable noise, endanger the health or safety of, or constitute a nuisance or inconvenience to the occupants of others shall be removed upon the Board's request. If the pet owner fails to honor such request, the Board may remove the pet. Dogs shall be kept on a leash or otherwise confined in a manner acceptable to the Board whenever outside the dwelling. Pets shall be registered, licensed, and inoculated as required by law;

(c) Any activity that emits foul or obnoxious odors outside the dwelling unit or creates noise or

other conditions that tend to disturb the peace or threaten the safety of the occupants of others;

(d) Any activity that violates local, state, or federal laws or regulations; however, the Board shall have no obligation to take enforcement action in the event of a violation;

(e) Pursuit of hobbies or other activities that tend to cause an unclean, unhealthy, or untidy condition to exist outside of enclosed structures on the Lot;

(f) Any noxious or offensive activity which in the reasonable determination of the Board tends to cause embarrassment, discomfort, annoyance, or nuisance to persons using the Common Area or to the occupants of other dwelling units;

(g) Outside burning of trash, leaves, debris, or other materials, except during the normal course of constructing a dwelling or in the normal and intended use of barbecue grills and patio fireplaces.

(h) Use or discharge of any radio, loudspeaker, horn, whistle, bell, or other sound device so as to be audible to occupants of other Lots, except alarm devices used exclusively for security purposes;

(i) Accumulation of rubbish, trash, or garbage except between regular garbage pick-ups, and then only in approved containers stored in the garage or inside the dwelling;

(j) Discharge of firearms; provided, the Board shall have no obligation to take action to prevent or stop such discharge;

(k) On-site storage of fuel, except that a reasonable amount of fuel may be stored on each Lot for emergency purposes and operation of lawn mowers and similar tools or equipment, and the Association shall be permitted to store fuel for operation of maintenance vehicles, generators, and similar equipment. This provision shall not apply to any underground fuel tank authorized pursuant to Article 5;

(l) Any activities which materially disturb or destroy the wetlands or air quality within Wire Road Subdivision;

(m) Regular use of any lot to host religious activities, motivational meetings, classes, parties, or similar activities requiring the parking of a number of vehicles exceeding the number that can be accommodated in the host's garage, driveway, and the right-of-way immediately in front of and adjacent to the home;

(n) Posting of any signs on Lots, Common Areas, or rights-of-way within or adjacent to the Community, except that:

the Declarant and the Association may post signs as they deem appropriate;

Subject to the limitations in Section 7 .1 of the Declaration, an Owner may post one standard real estate sign not to exceed four feet in height, the total message area of which does not to exceed

12 square feet (all sides combined), advertising the Lot on which it is posted "for sale" or "for lease;" and

(o) Conversion of any carport or garage to finished space for use as an apartment or other integral part of the living area or use in any manner that would preclude its use for parking of that number of vehicles for which it was designed and intended; and

Any modification of anything, permanently or temporarily, on the outside portions of the dwelling, whether such portion is improved or unimproved, except in strict compliance with the provisions of Article 5 of the Declaration. This shall include, without limitation, signs, basketball hoops, and swing sets and similar sports and play equipment; clotheslines; garbage cans; woodpiles; hedges, walls, or fences of any kind; decks; and satellite dishes and antennas, except that:

Prohibited Conditions. The following shall be prohibited at Wire Road Subdivision:

(a)The introduction of plants, animals, devices, or other things of any sort whose activities or existence in any way is noxious, dangerous, unsightly, unpleasant, or of a nature as may diminish or destroy the enjoyment of Wire Road Subdivision;

(b) Structures, equipment, or other items on the exterior portions of a structure which have become rusty, dilapidated, or otherwise fallen into disrepair;

(c) Storage sheds;

(d) Above-ground pools; and

(e) Dog runs or dog pens.

EXHIBIT D. STORMWATER SYSTEM MAINTENANCE PLAN

[To be provided by Attar Engineering]

BYLAWS

WIRE ROAD HOMEOWNERS ASSOCIATION

August 18, 2016

Prepared by
Joseph G. Carleton, Jr.
Attorney at Law
P.O. Box 369
Wells, ME 04090

Table of Contents

Article 1. Name, Principal Office, Definitions 1
1.1. Creation. 1
1.2. Purposes. 1
1.3. Application. 1
1.4. Membership 1
1.5. Powers. 1
1.6. Office. 1
1.7. Conflict. 2
1.8. Definitions. 2
Article 2. Membership: Meetings, Quorum, Voting, Proxies 2
2.1. Membership. 2
2.2. Place of Meetings. 2
2.3. Annual Meetings. 2
2.4 Special Meetings. 2
2.5 Notice of Meetings. 2
2.6 Waiver of Notice. 3
2.7 Adjournment of Meetings. 3
2.8. Voting. 3
2.9 Proxies. 3
2.10. Quorum. 4
2.11. Conduct of Meetings; Rules of Order 4
2.12. Action Without a Meeting. 4
Article 3. Board of Directors: Selection, Meetings, Powers. 4
3.1. Governing Body: Qualifications. 4
3.2. Number of Directors. 4
3.3. Selection of Initial, Interim and Permanent Board: Term of Office. 4
3.4. Nomination and Election Procedures. 5
3.5. Removal of Directors and Vacancies. 5
3.6. Organizational Meetings. 6
3.7. Regular Meetings. 6
3.8. Special Meetings. 6
3.9. Notice; Waiver of Notice. 6

3.10. Telephonic Participation in Meetings. 6
3.11. Quorum of Board. 7
3.12. Conduct of Meetings. 7
3.13. Open Meetings; Executive Session. 7
3.14. Action Without a Formal Meeting. 8
3.15. Powers. 8
3.16. Duties. 8
Article 4. Officers. 9
4.1 Designation. 9
4.2. Election of Officers. 9
4.3. Removal of Officers. 9
4.4. President. 9
4.5. Treasurer. 10
4.6. Secretary. 10
4.7. Auditor. 10
4.8. Amendments to Declaration. 10
Article 5. Committees 10
5.1. General. 10
5.2 Covenants Committee. 10
5.3. Design Review Committee. 11
Article 6. Standards of Conduct; Liability and Indemnification. 11
6.1. Standards for Directors and Officers. 11
6.2. Liability. 11
6.3. Indemnification. 12
6.4. Advancement of Expenses. 12
Article 7. Management and Accounting. 12
7.1 Compensation of Directors and Officers. 13
7.2. Right of Class "B" Member to Disapprove Actions within 10 days. 13
7.3. Managing Agent. 13
7.4. Accounts and Reports. 14
7.5. Borrowing. 14
7.6. Right to Contract. 15
7.7. Agreements. Contracts. Deeds. Leases. Checks. Etc. 15

Article 8 Enforcement Procedures. 15
8.1. Enforcement; OpportLoty to be Heard. 15
Article 9. Miscellaneous. 16
9.1. Fiscal Year. 16
9.2. Books and Records. 16
9.3. Inspection by Directors. 16
9.4. Notices. 17
Article 10. Amendment. 17
10.1. By Class B Member. 17
10.2. By Class A Members. 18
10.3. Validity and Effective Date of Amendments. 18

Article 1. Name, Principal Office, Definitions

1.1. Creation.

Wire Road Homeowners Association (the "Association") is organized as a Mutual Benefit Corporation under the Maine Nonprofit Corporation Act, title 13-B of the Maine Revised Statutes. It is the governing Association for the Wire Road subdivision.

1.2. Purposes.

The purposes of the Association are to establish an association of Lot Owners consisting of Owners in the Property known as Wire Road Subdivision. These Bylaws apply to the Property shown on the Subdivision Plans of Wire Road Subdivision, except to the extent specifically excluded by the Declaration or these Bylaws.

1.3. Application.

All present and future lot owners, mortgagees, lessees, licensees and occupants of the Lots in the Wire Road subdivision, their employees, agents and customers, and any other persons who may enter upon the Property in any manner are subject to these Bylaws and to Rules adopted by the Association.

1.4. Membership

The Members shall consist exclusively of all Owners of all Lots on the Property, and their successors and assigns. Membership is transferable only as provided in the Declaration or these Bylaws. The membership of a Lot Owner shall terminate upon the conveyance, transfer or other disposition of their interest in the Lot as reflected in the records of the York County Registry of Deeds. Membership and any interest in the assets of the Association shall then automatically transfer to and be vested in the successor in ownership. Membership is otherwise non-transferable. A mortgage of a Lot or the grant of a security interest therein as security for an obligation shall not operate to transfer membership until a foreclosure of the mortgage or security agreement.

1.5. Powers.

The Association shall generally have all powers given to nonprofit corporations under Title 13-B of the Maine Nonprofit Corporation Act to govern the Property shown on the Wire Road Subdivision Plan and all powers granted or allowed and not prohibited by the Declaration of Covenants, Conditions and Restrictions of Wire Road Subdivisions and all powers provided for or not prohibited by the Maine Nonprofit Corporation Act.

1.6. Office.

The principal office of the Association shall be located at the Property.

1.7. Conflict.

In the event of any conflict or discrepancy between the Declaration, the Bylaws, or the Rules, the provisions of the Declaration shall govern.

In the event of any conflict or discrepancy between the Declaration, the Bylaws or the Rules established by the Bylaws, the Declaration, Bylaws and Rules shall govern, in that order, subject to mandatory requirements of the Maine Nonprofit Corporation Act.

1.8. Definitions.

The definitions found in Section 1.2 of the Declaration are incorporated by reference.

Article 2. Membership: Meetings, Quorum, Voting, Proxies

2.1. Membership.

The Association shall have two classes of membership, Class "A," and Class "B", as set forth in Section 4.1 of the Declaration. The provisions of the Declaration pertaining to membership are incorporated by this reference.

2.2. Place of Meetings.

Meetings of the Association shall be held at the principal office of the Association or at such other suitable place convenient to the Members as the Board may designate.

2.3. Annual Meetings.

The first meeting of the Association, whether a regular or special meeting, shall be held within one year after the date of incorporation of the Association. The Board shall thereafter hold annual meetings at a date and time determined by the Directors.

2.4 Special Meetings.

The President may call special meetings. In addition, it shall be the duty of the President to call a special meeting if so directed by resolution of the Board or upon a petition signed by Members representing at least 10% of the total Class "A" votes in the Association.

No business may be conducted at a special meeting except as set out in the notice.

2.5 Notice of Meetings.

The President, the Secretary, or the officers or other persons calling a meeting of the Members shall deliver or cause to be delivered to each Member entitled to vote at such meeting a written notice stating the place, day, and hour of the meeting. In the case of a special meeting or when otherwise required by statute, the Declaration, or these Bylaws, the purpose or purposes for which the meeting is called shall also be stated in the notice. No business shall be transacted at a special meeting except as stated in the notice.

Such notice shall be delivered by such means as permitted under Section 9.7, not less than 10 nor more than 30 days before the date of such meeting.

2.6 Waiver of Notice.

Waiver of notice of a meeting of the Members shall be deemed the equivalent of proper notice. Any Member may waive, in writing, notice of any meeting of the Members, either before or after such meeting. Attendance at a meeting by a Member shall be deemed waiver by such Member of notice of the time, date, and place thereof, unless such Member specifically objects to lack of proper notice at the time the meeting is called to order. Attendance at a special meeting also shall be deemed waiver of notice of all business transacted at such meeting unless an objection on the basis of lack of proper notice is raised before the business is put to a vote.

2.7 Adjournment of Meetings.

If any meeting of the Members cannot be held because a quorum is not present, a majority of the Members who are present at such meeting may adjourn the meeting to a time not more than 30 days from the time the original meeting was called. At the reconvened meeting, if a quorum is present, any business may be transacted which might have been transacted at the meeting originally called. If a time and place for reconvening the meeting is not fixed by those in attendance at the meeting when originally called, or if for any reason a new date is fixed for reconvening the meeting after adjournment, notice of the time and place for reconvening the meeting shall be given to Members in the manner prescribed for regular meetings.

Members present at a duly called or held meeting at which a quorum is present may continue to do business until adjournment, notwithstanding the departure of Members leaving Jess than a quorum, provided that any action taken is approved by at least a majority of the votes required to constitute a quorum.

2.8. Voting.

Voting Rights. The voting rights of the Members set forth in Section 4.2 and elsewhere in the Declaration are specifically incorporated by reference.

2.9 Proxies.

Members may vote by proxy in accordance with standards for proxies set out in the Maine Nonprofit Corporation Act.

Every proxy shall be in writing, shall identify the Lot for which it is given, and shall be signed by the Member or his duly authorized attorney-in-fact, dated, and filed with the Secretary of the Association prior to the meeting for which it is to be effective. Unless otherwise specifically provided in the proxy, a proxy shall be presumed to cover all votes which the Member giving such proxy is entitled to cast, and in the event of any conflict between two or more proxies purporting to cover the same voting rights, the later dated proxy shall prevail, or if dated as of the same date, both shall be deemed invalid.

Every proxy shall be revocable and shall automatically cease upon: (a) transfer of title to any Lot for which it was given; (b) receipt by the Secretary of written notice of revocation of the proxy or of the death or judicially declared incompetence of a Member who is a natural person; or in any event, (c) 11 months from the date of the proxy, unless a shorter period is specified in the proxy.

2.10. Quorum.

Except as otherwise provided in these Bylaws or in the Declaration, the presence, in person or by proxy, of Members representing 40% of the total Class "A" votes in the Association shall constitute a quorum at all meetings of the Association membership.

2.11. Conduct of Meetings; Rules of Order

Members may adopt and amend, from time to time, rules governing the conduct of meetings. To the extent not covered by such rules, the most current edition of Robert's Rules of Order shall govern meetings of Members.

2.12. Action Without a Meeting.

Any action required or permitted by law to be taken at a meeting of the Members may be taken without a meeting, without prior notice and without a vote, if written consent specifically authorizing the proposed action is signed by all Members entitled to vote on such matter. Such consents shall be signed within 60 days after receipt of the earliest dated consent, dated and delivered to the Association. Such consents shall be filed with the minutes of the Association and shall have the same force and effect as a vote of the Members at a meeting.

Article 3. Board of Directors: Selection, Meetings, Powers.

3.1. Governing Body: Qualifications.

The affairs of the Association shall be governed by a board of directors, elected by Class "A" and Class "B" Members. Directors elected by Class "A" Members shall be Owners of Lots in Wire Road Subdivision or, if the Lot or Lot Owner is not a natural person, any officer, director, member, manager, partner or trustee thereof, or any other representative designated in writing by the Owner, shall be eligible to serve as a director.

The Class "B" member shall be the Declarant or an assignee or representative of the Declarant.

3.2. Number of Directors.

The Board shall consist of three to five directors, as provided in Section 3.3.

3.3. Selection of Initial, Interim and Permanent Board: Term of Office.

(a) Initial Board. The initial Board shall consist of three directors, appointed by the Class "B" Member. They shall serve until their successors are appointed or elected as provided in this Section 3.3. The Class "B" Member shall be entitled to appoint, remove and replace the directors it appoints in its sole discretion until termination of the Declarant Control Period.

(b) Interim Board. Within 60 days after termination of the Declarant Control Period, the number of directors shall be increased automatically to five members upon the selection of four Class "A" directors, with the Declarant or its assignee designating the fifth, Class "B" member of the Board.

Four of the Class "A" Interim directors shall be elected, at large, by Members. Upon election

and selection of the Interim Board, the terms of the Initial directors shall automatically expire.

(c) Permanent Board. The Interim Board shall call an election for a Permanent Board in time for the Permanent Board to take office no more than 18 months after the election of the Interim Board.

The four Class “A” Permanent directors shall be elected, at large, by Lot Owners, two for a one year term, one for a two year term and one for a three year term. Thereafter, the terms of these four directors shall be three years. Upon election and selection of the Permanent Board, the terms of the Interim Board members shall automatically expire.

Directors shall hold office until their respective successors have been elected. Directors may be elected to serve any number of consecutive terms.

3.4. Nomination and Election Procedures.

1. Nomination by or through Nominating Committee. Initial, Interim and Permanent Boards shall all appoint nominating committees appointed by the Board. The Nominating Committee shall consist of not more than one member of the current Board of Directors, who shall not be the President of the Association, and two other persons. The Nominating Committee shall recruit and evaluate suitable candidates and make recommendations for membership on the Board.

a) Selected by the Nominating Committee. The Nominating Committee shall actively seek out qualified candidates and recommend a slate of nominees each seat on the Board to be filled in the next election. They shall submit their list of nominations to the Secretary a reasonable length of time before notice of the meeting is sent.

b) Nomination by Petition. Other candidates may be nominated by petition signed by at least five Members, submitted to the Secretary a reasonable time before the notice of meeting is sent.

The names of all qualified persons timely nominated by petition or by the Nominating Committee in accordance with this section shall be included in the materials sent as part of the meeting notice. The Board shall include information submitted by candidates, no more than one page in length, timely received prior to the notice of meeting being sent.

All nominees must be either (1), present at the meeting and consent to the nomination, or (2), have indicated in a writing submitted to the Secretary prior to the meeting that he or she is willing to serve on the Board.

2. From the Floor. Candidates for membership on the Board of Directors may also be made by motion at the meeting of Members.

Conduct of Election. Election to the Board of Directors shall be by written ballot of Members present in person or by proxy, unless uncontested, in which case the presiding officer shall declare the unopposed candidate elected. There shall be separate elections for positions having terms of different length. The candidates receiving the largest number of votes for each position shall be elected, notwithstanding that they do not receive a majority of votes cast.

3.5. Removal of Directors and Vacancies.

Directors named by Class “B” Member may be replaced at any time at the discretion of the Class “B” Member.

Any director elected by Class "A" votes may be removed, with or without cause, by vote of a majority of Members of the Association, at a special meeting called for that purpose, as

authorized in the Articles of Organization. Upon removal of a director by the Members, a successor shall be elected by those present at the Member's meeting for the remainder of the term of such director, pursuant to Section 703. of the Nonprofit Corporation Act.

In the event of the death, disability, or resignation of a director, the Board may declare a vacancy and appoint a successor to fill the vacancy for the unexpired term of his predecessor, in accordance with Section 703.2 of the Maine Nonprofit Corporation Act.

3.6. Organizational Meetings.

The first meeting of the Board shall be held immediately following each annual meeting of the membership.

3.7. Regular Meetings.

Regular meetings of the Board may be held at such time and place as a majority of the directors shall determine.

3.8. Special Meetings.

Special meetings of the Board shall be held when called by written notice signed by the President or Vice President or by any two directors.

3.9. Notice; Waiver of Notice.

(a) Notices of Board meetings shall specify the time and place of the meeting and, in the case of a special meeting, the nature of any special business to be considered. The notice shall be given to each director by: (i) personal delivery; (ii) first class mail, postage prepaid; (iii) telephone communication, either directly to the director or to a person at the director's office or home who would reasonably be expected to communicate such notice promptly to the director; or facsimile, computer, or other electronic mail, messaging or communication device, with printed confirmation of successful transmission. All such notices shall be given at or sent to the director's telephone number, fax number, electronic mail address, or mailing or physical address as shown on the records of the Association. Notices sent by first class mail shall be deposited into a Unted States mailbox at least five business days before the time set for the meeting. Notices given by personal delivery, telephone, or other device shall be delivered or transmitted at least 72 hours before the time set for the meeting.

(b) Transactions of any Board meeting, however called and noticed or wherever held, shall be as valid as though taken at a meeting duly held after regular call and notice if (i) a quorum is present, and (ii) either before or after the meeting each director not present signs a written waiver of notice, a consent to holding the meeting, or an approval of the minutes. The waiver of notice or consent need not specify the purpose of the meeting. Notice of a meeting also shall be deemed given to any director who attends the meeting without protesting before or at its commencement about the lack of adequate notice.

3.10. Telephonic Participation in Meetings.

Members of the Board or any committee which the Board appoints may participate in a meeting of the Board or committee by conference telephone, video conference, or similar

communications equipment, provided all persons participating in the meeting can hear each other simultaneously. Participation in a meeting pursuant to this section shall constitute presence in person at such meeting.

3.11. Quorum of Board.

At all Board meetings, a majority of the directors shall constitute a quorum for the transaction of business, and the votes of a majority of the directors present at a meeting at which a quorum is present shall constitute the decision of the Board, unless otherwise specifically provided in these Bylaws or the Declaration. A meeting at which a quorum is initially present may continue to transact business, notwithstanding the departure of some directors, if any action taken is approved by at least a majority of the required quorum for that meeting. If any Board meeting cannot be held because a quorum is not present, a majority of the directors present at such meeting may adjourn the meeting to a time not more than 30 days from the date of the original meeting. At the reconvened meeting, if a quorum is present, any business which might have been transacted at the meeting originally called may be transacted without further notice.

3.12. Conduct of Meetings.

Meetings of the Board may be conducted informally with reference to the "small meeting" guidance offered by the latest edition of Robert's Rules of Order.

3.13. Open Meetings; Executive Session.

The Board shall give timely notice reasonably calculated to inform Members of the date, time and place of and topics proposed to be discussed at meetings of the board. The notice may be given by a posting in a prominent place in the common elements or elsewhere, by e-mail or by other means, or by any combination of these methods, but actual notice need not be delivered to each Member. Failure of a Member to receive notice does not invalidate any action taken by the Board at the meeting.

(a) All Board meetings shall be open to all Members, subject to reasonable rules established by the Board. The Board shall set aside as an agenda item for each meeting a time for any Member to make a brief statement or presentation to the Board, with time limits for each speaker as may be set by the Board or the presiding officer. Otherwise, attendees other than directors may not participate in any discussion or deliberation unless a director requests that they be granted permission to speak and the presiding officer consents. In any case, the presiding officer may limit the time any such individual may speak.

(b) Notwithstanding the above, the Board, by majority vote, may go into executive session, limiting attendance to those it invites, for the following purposes, which must be stated in the motion:

(i) Consult with the association's attorney concerning legal matters;

(ii) Discuss existing or potential litigation or mediation, arbitration or administrative proceedings;

(iii) Discuss labor or personnel matters;

(iv) Discuss contracts, leases and other commercial transactions to purchase or provide goods or services currently being negotiated, including the review of bids or proposals, if premature

general knowledge of those matters would place the association at a disadvantage; or

(v) Prevent public knowledge of the matter to be discussed if the executive board determines that public knowledge would violate the privacy of any person.

A final vote or action may not be taken during an executive session.

3.14. Action Without a Formal Meeting.

Any action to be taken at a meeting of the directors or any action that may be taken at a meeting of the directors may be taken without a meeting if a consent in writing, setting forth the action so taken, is signed by all of the directors, and such consent shall have the same force and effect as a unanimous vote.

3.15. Powers.

The Board shall have all of the powers and duties necessary for the administration of the Association's affairs and for performing all responsibilities and exercising all rights of the Association as set forth in the Declaration and as allowed by the Maine Nonprofit Corporation Act. The Board may do or cause to be done on behalf of the Association all acts and things except those which the Declaration, these Bylaws or Maine law require to be done and exercised exclusively by the Members or the Declarant or Declarant's successors in interest. Board determinations as to the meaning, scope, and application of Governing Document provisions shall be upheld and enforced so long as such determinations are reasonable.

3.16. Duties.

Duties of the Board shall include, without limitation:

(a) preparing and adopting, in accordance with the Declaration, an annual budget establishing each Lot's share of the Common Expenses; and levying and collecting such assessments from the Members;

(b) providing for the operation, care, upkeep, and maintenance of the Common Areas, including compliance with all requirements contained in requirements and conditions of approval of the Wells Planning Board and the Maine Department of Environmental Protection;

(c) designating, hiring, and dismissing personnel necessary to carry out the Association's rights and responsibilities and where appropriate, providing for compensation of such personnel and for the purchase of equipment, supplies, and materials to be used by such personnel in the performance of their duties;

(d) depositing all funds received on behalf of the Association in a bank depository which it shall approve, and using such funds to operate the Association; provided, any reserve funds may be deposited, in the Board's best judgment, in depositories other than banks;

(d) making and amending Restrictions and Rules in accordance with the Declaration

(e) opening bank accounts on behalf of the Association and designating the signatories required;

(f) making or contracting for the making of repairs, additions, and improvements to or alterations of the Common Area in accordance with the Declaration and these Bylaws;

(g) enforcing by legal means the provisions of the Governing Documents and bringing any proceedings which may be instituted on behalf of or against the Members concerning the

Association; provided, the Association's obligation in this regard shall be conditioned in the manner provided in the Declaration;

(h) obtaining and carrying property and liability insurance and fidelity bonds, as provided in the Declaration, paying the cost thereof, and filing and adjusting claims, as appropriate;

(i) paying the cost of all services rendered to the Association;

(j) keeping books with detailed accounts of the Association's receipts and expenditures;

(k) making available to any prospective purchaser of a Lot, any Member, and the holders, insurers, and guarantors of any Mortgage on any Lot, current copies of the Governing Documents and all other books, records, and financial statements of the Association as provided in Section 9.4;

(l) permitting utility suppliers to use portions of the Common Area reasonably necessary to the ongoing development or operation of the Properties, subject to limitations imposed by governmental permits and conditions;

(m) Indemnifying a director, officer or committee member, or former director, officer or committee member of the Association to the maximum extent such indemnity is allowed by Maine law, the Articles and these Bylaws; and

(n) assisting in the resolution of disputes between Members and others without litigation, as set forth in the Declaration.

Article 4. Officers.

4.1 Designation.

The principal officers of the Association shall be a President, a Secretary and a Treasurer, of whom only the President need be elected from among the Directors. The Directors may in their discretion appoint such other officers, none of whom need be directors, as in their judgment may be necessary.

4.2. Election of Officers.

The principal officers of the Association shall be elected annually by the Board of Directors at the annual meeting and shall hold office at the pleasure of the Board.

4.3. Removal of Officers.

Upon a majority vote of the Board of Directors, any officer may be removed, either with or without cause, and his successor elected at any regular meeting of the Board of Directors, or at any special meeting of the Board of Directors called for such purpose, any officer may be removed, either with or without cause, and his successor elected. Any officer whose removal has been proposed, shall be given an opportunity to be heard at the meeting, but the Board’s decision shall be final.

4.4. President.

The President shall be the chief executive officer of the Association and shall be a Director. He or she shall generally preside at meetings of the Association and of the Board of Directors.

4.5. Treasurer.

The Treasurer shall be responsible for keeping the financial records and accounts of all receipts and disbursements in books belonging to the association. He or she shall be responsible, subject to the direction of the Board of Directors, for the preparation and dissemination to the members of all financial reports, budgets and notices required and for the preparation and signing, if necessary, of all financial reports or tax returns required to be filed by the Association.

4.6. Secretary.

The Secretary shall keep and certify the minutes of all meetings of the Board of Directors or of the Association, shall give all notices as provided by these Bylaws, and shall have other powers and duties as may be incidental to the offices of Secretary, given by these Bylaws or assigned to him from time to time by the Directors. If the Secretary or any assistant secretary shall not be present at any meeting, the presiding officer shall appoint a secretary pro tempore who shall keep the minutes of such meeting and record them in the books provided for that purpose. The Secretary shall be responsible for the filing of all reports and documents required to be filed by the Association with any governmental agency.

4.7. Auditor.

The Board of Directors, may from time to time, appoint some person, firm or corporation engaged in the business of auditing to act as auditor of the Association and to perform such audits and fiscal duties as may be requested by the Association.

4.8. Amendments to Declaration.

The Secretary shall prepare amendments to the Declaration and the President and Secretary shall execute the certificate for recording on behalf of the Association.

Article 5. Committees

5.1. General.

The Board may appoint such committees as it deems appropriate to perform such tasks and to serve for such periods as the Board may designate by resolution. Each committee shall operate in accordance with the terms of such resolution.

5.2 Covenants Committee.

In addition to any other committees which the Board may establish pursuant to Section 5.1, the Board may appoint a Covenants Committee consisting of at least three and no more than seven Members. Acting in accordance with the provisions of the Declaration, these Bylaws, and resolutions the Board may adopt, the Covenants Committee, if established, shall be the hearing tribunal of the Association and shall conduct all hearings held pursuant to these Bylaws.

5.3. Design Review Committee.

Upon the Declarant's delegation of authority, or upon expiration or termination of the Declarant's rights under Article 5 of the Declaration, the Board shall appoint a Design Review Committee ("Design Review Committee" or "DRC") to assume jurisdiction over matters within the scope of the delegated authority of Article 5. The DRC shall consist of at least three, but not more than seven, persons, who shall serve and may be removed and replaced in the Board's discretion. DRC members need not be Owners or representatives of Owners. The DRC may, but need not, include architects, engineers, or similar professionals. The Association may compensate DRC members in such manner and amount, if any, as the Board may determine appropriate.

Further details about the DRC are set out in Article 5 of the Declaration..

Article 6. Standards of Conduct; Liability and Indemnification.

6.1. Standards for Directors and Officers.

The Board shall exercise its powers in a reasonable, fair, nondiscriminatory manner and shall adhere to the procedures established in the Governing Documents.

In performing their duties, directors and officers shall be insulated from liability as provided for directors of corporations under the Maine Nonprofit Corporation Act and as otherwise provided by the Governing Documents. Directors and officers shall discharge their duties as directors or officers, and as members of any committee to which they are appointed, in a manner that the director or officer believes in good faith to be in the best interest of the corporation and with the care that an ordinarily prudent person in a like position would exercise under similar circumstances. A director is entitled to rely on information, opinions, reports, or statements, including financial statements and other financial data, prepared or presented by others to the extent authorized under the Maine Nonprofit Corporation Act.

6.2. Liability.

A director shall not be personally liable to the Association, any Member, or any other Person for any action taken or not taken as a director if the director has acted in accordance with Section 6.1.

Pursuant to the business judgment rule, a director also shall not be personally liable for any action taken or not taken as a director if the director:

(a) acts within the expressed or implied scope of the Governing Documents and his or her actions are not ultra vires;

(b) affirmatively undertakes to make decisions which are necessary for the Association's continued and successful operation and, when decisions are made, makes them on an informed basis;

(c) acts on a disinterested basis, promptly disclosing any real or potential conflict of interests (pecuniary or other), and avoiding participation in decisions and actions on matters as to which he has a conflict of interest (beyond that which all directors have by virtue of their ownership or occupancy of a Lot or Lot); and

(d) acts in a non-fraudulent manner and without reckless indifference to the Association's affairs.

The officers, directors, and committee members of the Association shall not be liable for any mistake of judgment, negligent or otherwise, except for their own individual willful misfeasance, malfeasance, misconduct, or bad faith. The officers and directors shall have no personal liability with respect to any contract or other commitment made or action taken in good faith on behalf of the Association (except to the extent that such officers or directors may also be Members of the Association).

6.3. Indemnification.

Subject to the limitations of Maine law, the Association shall indemnify every officer, director, and committee member against all damages and expenses, including counsel fees and expenses, reasonably incurred in connection with any action, suit, or other proceeding (including settlement of any suit or proceeding, if approved by the then Board of Directors) to which he or she may be a party by reason of being or having been an officer, director, or committee member, except that the Association shall have no obligation to indemnify any individual against liability or expenses incurred in connection with a proceeding:

(a) brought by or in the right of the Association, although it may reimburse the individual for reasonable expenses incurred in connection with the proceeding if it is determined, by the court or in the manner provided above, that the individual met the relevant standard of conduct under the Maine Non-Profit Corporation Act; or

(b) to the extent that the individual is adjudged liable for conduct that constitutes:

(i) appropriation, in violation of his or her duties, of any business opportunity of the Association; or

(ii) intentional misconduct or knowing violation of the law; or

(iii) an unlawful distribution to members, directors or officers; or

(iv) receipt of an improper personal benefit.

This right to indemnification shall not be exclusive of any other rights to which any present or former officer, director, or committee member may be entitled. The Association shall, as a Common Expense, maintain adequate general liability and officers' and directors' liability insurance to fund this obligation, if such insurance is reasonably available.

6.4. Advancement of Expenses.

In accordance with the procedures and subject to the conditions and limitations set forth in the Maine Non-Profit Corporation Act, the Board may authorize the Association to advance funds to pay for or reimburse the reasonable expenses incurred by a present or former officer, director or committee member in any proceeding to which he or she may be a party by reason of being or having been an officer, director, or committee member of the Association.

Article 7. Management and Accounting.

7.1 Compensation of Directors and Officers.

Directors and officers shall not receive any compensation from the Association for acting as such unless approved by Members representing a majority of the total Class "A" votes in the Association at a regular or special meeting of the Association. Any director or officer may be reimbursed for expenses incurred on behalf of the Association upon approval of a majority of the other directors. Nothing herein shall prohibit the Association from compensating a director or officer, or any entity with which a director or officer is affiliated, for services or supplies furnished to the Association in a capacity other than as a director or officer pursuant to a contract or agreement with the Association, provided that such director's or officer's interest was made known to the Board prior to entering into such contract and such contract was approved by a majority of the Board, excluding any interested director.

7.2. Right of Class "B" Member to Disapprove Actions within 10 days.

(a) Right to Disapprove. So long as the Class "B" membership exists, the Class "B" Member shall have a right to disapprove any action, policy or program of the Association, the Board and any committee which, in the sole judgment of the Class "B" Member, would tend to impair rights of Declarant or Builders under the Declaration or these Bylaws, or interfere with development or construction of any portion of Wire Road Subdivision, or diminish the level of services being provided by the Association. No action, policy or program subject to the right of disapproval set forth herein shall become effective or be implemented until and unless the requirements of this Section have been met.

(b) Right to Notice of Meetings. The Class "B" Member shall be given written notice of all meetings of Owners and the board of directors and proposed actions approved at meetings (or by written consent in lieu of a meeting) of the Association, the Board or any committee. Such notice shall set forth with reasonable particularity the agenda to be followed at such meeting.

(c) Opportunitv to be Heard. The Class "B" Member shall be given the opportunity at any such meeting to join in or to have its representatives or agents join in discussion from the floor of any prospective action, policy, or program which would be subject to the right of disapproval set forth herein.

(d) 10 Days to Act. The Class "B" Member, its representatives or agents shall make its concerns, thoughts, and suggestions known to the Board and/or the members of the subject committee. The Class "B" Member, acting through any officer or director, agent or authorized representative, may exercise its right to disapprove at any time within 10 days following the meeting at which such action was proposed or, in the case of any action taken by written consent in lieu of a meeting, at any time within 10 days following receipt of written notice of the proposed action. This right to disapprove may be used to block proposed actions but shall not include a right to require any action or counteraction on behalf of any committee, the Board, or the Association. The Class "B" Member shall not use its right to disapprove to reduce the level of services which the Association is obligated to provide or to prevent capital repairs or any expenditure required to comply with applicable laws and regulations.

7.3. Managing Agent.

The Board may employ for the Association a professional management agent or agents at

such compensation as the Board may establish, to perform such duties and services as the Board shall authorize. The Board may delegate such powers as are necessary to perform the manager's assigned duties, but shall not delegate policy-making authority or ultimate responsibility for those duties set forth in Section 3.16. Declarant or its affiliate may be employed as managing agent or manager.

The Board may delegate to one of its members the authority to act on the Board's behalf on all matters relating to the duties of the managing agent or manager, if any, which might arise between Board meetings.

The Association shall not be bound, either directly or indirectly, by any management contract executed during the Declarant Control Period unless such contract contains a right of termination which may be exercised by the Association, with or without cause and without penalty, at any time after termination of the Declarant Control Period upon not more than 90 days' written notice.

No remuneration shall be accepted by the managing agent from vendors, independent contractors, or others providing goods or services to the Association, whether in the form of commissions, finder's fees, service fees, prizes, gifts, or otherwise; anything of value received shall benefit the Association. Any financial or other interest which the managing agent may have in any firm providing goods or services to the Association shall be disclosed promptly to the Board.

7.4. Accounts and Reports.

Unless the Board, by resolution, determines otherwise, cash or accrual accounting, as defined by generally accepted accounting principles, shall be employed; and accounting and controls should conform to generally accepted accounting principles.

An annual report consisting of at least the following shall be made available to all Members within 120 days after the close of the fiscal year: (i) a balance sheet; (ii) an operating (income) statement; and (iii) a statement of changes in financial position for the fiscal year. Such annual report shall be prepared on an audited, reviewed, or compiled basis, as the Board determines, by an independent public accountant. During the Declarant Control Period, the annual report shall include certified financial statements.

7.5. Borrowing.

The Association shall have the power to borrow money for any legal purpose; provided, the Board shall obtain Member approval in the same manner provided in the Declaration for Special Assessments if the proposed borrowing is for the purpose of making discretionary capital improvements and the total amount of such borrowing, together with all other debt incurred within the previous 12-month period, exceeds or would exceed 20% of the Association's budgeted gross expenses for that fiscal year. During the Declarant Control Period, no Mortgage lien shall be placed on any portion of the Common Area without the affirmative vote or written consent, or any combination thereof, of Members representing at least 51% of the total Class "A" votes, in addition to such approval as may be required under the Declaration.

7.6. Right to Contract.

The Association shall have the right to contract with any Person for the performance of various duties and functions. This right shall include, without limitation, the right to enter into common management, operational, or other agreements with trusts, condominiums, cooperatives, or neighborhood and other Owners or residents associations, within and outside Wire Road Estates. Any common management agreement shall require the consent of a majority of the total number of directors on the Board.

7.7. Agreements. Contracts. Deeds. Leases. Checks. Etc.

All agreements, contracts, deeds, leases, checks, and other instruments of the Association shall be executed by at least two officers or by such other person or persons as the Board may designate by resolution.

Article 8 Enforcement Procedures.

8.1. Enforcement; Opportunity to be Heard.

The Association shall have the power, as provided in the Declaration, to impose sanctions for any violation of the Governing Documents. To the extent specifically required by the Declaration or Maine law, the Board shall provide an Opportunity to be Heard prior to imposition of sanctions.

The Opportunity to be Heard requires that reasonable notice be given to the alleged violator describing the alleged violation, or property damage which is the basis of the proposed sanction, describing the proposed sanctions or fines which might be imposed, setting a date, place and time where the alleged violator may present their case, and notify the alleged violator that the meeting will be rescheduled to another date upon a timely, reasonable request for a postponement. The hearing may be conducted by conference call. The hearing will be conducted before the Board or the Covenants Committee, if one has been appointed. If the hearing is to be held before a Covenants Committee, the notice shall also state that the alleged violator has the right to appeal the decision of the Covenants Committee to the Board.

At the hearing, the alleged violator shall be afforded a reasonable opportunity to explain his or her position and to present defenses to the allegations. The minutes of the meetings of the Board or Covenants Committee, as applicable, shall contain a written statement of the results of the hearing (i.e., the decision of the Board or Committee) and the sanction, if any, to be imposed.

If the alleged violator does not appear at the hearing, the board or Covenants Committee may decide the matter without the alleged violator’s presence.

Following a hearing before the Covenants Committee, the violator shall have the right to appeal the decision to the Board. To exercise this right, a written notice of appeal must be received by the Association's manager, President, or Secretary within 10 days after the hearing date.

Article 9. Miscellaneous.

9.1. Fiscal Year.

The Association's fiscal year shall be the calendar year unless the Board establishes a different fiscal year by resolution.

9.2. Books and Records.

(a) The Association shall retain the same records as required under Section 1603-118 (a) of the Maine Condominium Act.

(b) Subject to subsections (c) and (d), all records retained by an Association must be available for examination and copying by a Member or the Member's authorized agent:

(1) During reasonable business hours at the Association's office or other mutually agreeable time or location; and

(2) Upon 10 days' notice in writing reasonably identifying the specific records of the Association requested.

(c) Records retained by the Association may be withheld from inspection and copying to the extent that they concern:

(1) Personnel, salary and medical records relating to specific individuals;

(2) Contracts, leases and other commercial transactions to purchase or provide goods or services currently being negotiated;

(3) Existing or potential litigation or mediation, arbitration or administrative proceedings;

(4) Existing or potential matters involving federal, state or local administrative or other formal proceedings before a governmental tribunal for enforcement of the declaration, bylaws or rules;

(5) Communications with the Association's attorney that are otherwise protected by the attorney-client privilege or the attorney work-product doctrine;

(6) Information the disclosure of which would violate applicable law;

(7) Records of an executive session of the board of directors; or

(8) Individual Lot or Lot files other than those of the requesting Member.

(d) The Association may charge a reasonable fee for providing copies of any records under this section and for supervising inspection of the records by the Member or the Member's representative.

(e) A right to copy records under this section includes the right to receive copies by photocopying or other means, including copies through an electronic transmission if available upon request by the Member.

(f) The Association is not obligated to compile or synthesize information.

(g) Information provided pursuant to this section may not be used for commercial purposes or any other purpose not reasonably related to the management of the association or the duties, rights or responsibilities of Members, officers or directors under the Association's Governing Documents.

9.3. Inspection by Directors.

Every director shall have the absolute right at any reasonable time to inspect all books,

records, and documents of the Association and the physical properties owned or controlled by the Association, except those matters which may be withheld from Members under Section 9.4 (c) that relate to the director's personal interests adverse to the Association, such as a directors existing or potential litigation or mediation, arbitration or administrative proceedings against the Association and communications with the Association's attorney and records of an executive session relating to such matters.

The right of inspection by a director includes the right to make a copy of relevant documents at the Association's expense.

9.4. Notices.

Form of Notice and Method of Delivery. Except as otherwise provided in the Declaration or these Bylaws or by law, all notices, demands, bills, statements, or other communications under the Declaration or these Bylaws shall be in writing and may be delivered in person, by United States mail, by private carrier, or if the intended recipient has given its prior written authorization to use such method of delivery, by telephone facsimile or electronic mail with written confirmation of transmission.

Delivery Address. Notices shall be delivered or sent to the intended recipient as follows:

if to a Member, at the address, telephone facsimile number, or e-mail address which the Member has designated in writing and filed with the Secretary or, if no such address has been designated, at the address of the Lot of such Member;

if to the Association, the Board, or a committee of either, at the address, telephone facsimile number, or e-mail address of the principal office of the Association or its managing agent, or at such other address as the Association shall designate by notice in writing to the Members pursuant to this Section; or

if to the Declarant, at the principal address of the Declarant as it appears on the Secretary of State's records, or at such other address as the Declarant shall designate by notice in writing to the Association pursuant to this Section.

Effective Date. Notice shall be deemed to have been duly given and effective:

if sent by United States mail, when deposited with the U. S. Postal Service, correctly addressed, with first class or higher priority postage prepaid;

if delivered personally or by private carrier, when actually delivered to the address of the intended recipient, as evidenced by the signature of the person at such address who accepts such delivery;

if sent by telephone facsimile or electronic mail, upon transmission, as evidenced by a printed confirmation of transmission.

Article 10. Amendment.

10.1. By Class B Member

Prior to termination of the Declarant Control Period, the Class "B" Member may unilaterally amend these Bylaws. Thereafter, the Class "B" Member may unilaterally amend these Bylaws at any time and from time to time if such amendment is necessary (i) to bring any provision into

compliance with any applicable governmental statute, rule or regulation, or judicial determination; (ii) to enable any reputable title insurance company to issue title insurance coverage on the Lots; or (iii) to enable any institutional or governmental lender, purchaser, insurer or guarantor of mortgage loans, including, for example, the Federal National Mortgage Association or Federal Home Loan Mortgage Corporation, to make, purchase, insure or guarantee mortgage loans on the Lots. So long as the Class "B" membership exists, the Class "B" Member may unilaterally amend these Bylaws for any other purpose, provided the amendment has no material adverse effect upon any right of any Member.

10.2. By Class A Members.

Except as provided in Section 10.1, these Bylaws may be amended only by the affirmative vote or written consent, or any combination thereof, of Members representing 67% of the total Class "A" votes in the Association, and the consent of the Declarant. Notwithstanding the above, the percentage of votes necessary to amend a specific clause shall not be less than the prescribed percentage of affirmative votes required for action to be taken under that clause.

No amendment may remove, revoke, or modify any right or privilege of Declarant without the written consent of Declarant.

10.3. Validity and Effective Date of Amendments.

Amendments to these Bylaws shall become effective upon recording in the York County Registry of Deeds unless a later effective date is specified therein. Any challenge to an amendment must be made within one year months of its recording, or such amendment shall be presumed to have been validly adopted. In no event shall a change of conditions or circumstances operate to amend any provisions of these Bylaws.

CERTIFICATION

I, the undersigned, do hereby certify:

That I am the duly elected and acting Secretary of Wire Road Homeowners Association, a Maine Nonprofit Corporation

That the foregoing Bylaws constitute the Bylaws of said Association, as adopted by Resolution of the Association dated _____ 2015

IN WITNESS WHEREOF, I have hereunto subscribed my name and seal of the Association this _____ day of _____, 2015

_____

Fire Pond and Hydrant Easement

Know all men by these presents, that **Highpine Properties, LLC**, a Maine limited liability company doing business in Wells, in the County of York, State of Maine, hereby grants to the **Inhabitants of the Town of Wells**, a Maine municipal corporation duly recognized and existing under the laws of the State of Maine with a mailing address of 208 Sanford Road, Wells, Maine 04090, an easement for access to and use of a fire hydrant and Pond and any appurtenant Fire Safety Systems and Equipment situated on Camerons Lane, Wells, Maine, depicted on subdivision plans collectively entitled "Cluster Subdivision Plan, Wire Road, Wells, Maine" by Attar Engineering, and approved by the Town of Wells Planning Board on _____ and recorded at Plan Book _____, Page _____ in the York County Registry of Deeds (the "Plan"), the area for said easement being all roads and ways shown on said plan ****as well as any area(s) noted on the Plan(s) as Fire Pond Easement Area, and if not so noted, shall be all areas within twenty (20) feet of said hydrant or fire pond.

The obligations of Highpine Properties, LLC and its successors in interest, do not apply to a hydrant to be installed on Wire Road.

The Grantor herein, and after certain conveyances to Wire Road Homeowners Association, a Maine non-profit corporation organized and existing under the laws of the State of Maine (the "Association"), the Association, shall be responsible for the maintenance of the Hydrant and/or Fire Pond and any appurtenant Fire Safety Systems and Equipment. In the event that the Grantor or Association shall fail to maintain the said Fire Pond and appurtenant Fire Safety Systems and Equipment, the Town of Wells shall have the right but, not the responsibility, to maintain the same and shall have the right to collect from the Grantor or Association the cost of said maintenance. This maintenance responsibility shall include, but not be limited to, repairing the fire hydrant (unless such repairs are necessary due to the gross negligence of the Grantee or its fire safety personnel) at the request of Grantee or its chief fire safety officer within 30 days of notice or any such request, and keeping clear from all vegetation or debris a three foot wide area between the hydrant/fire pond and the nearest point on a road or way.

Meaning and intending to establish, and hereby establishing, a public use easement for the purposes of access to and usage of a hydrant and/or fire pond, appurtenant to public way nearest to, or connected to, the development depicted on the Plan. This easement includes the right to enter upon the said roads and ways shown as the Plan and the said lots or areas on which the hydrant and/or fire pond are/is located with personnel and equipment to take water for all purposes related to fire protection for the public at large.

IN WITNESS WHEREOF, the Grantor has caused this instrument to be executed by _____its_____, this _____day of _____, 2016.

Highpine Properties, LLC

_____ By:_____

Witness Print Name:

Its _____, duly authorized

STATE OF MAINE

County of York, ss. Date: _____

Then personally appeared the above-named _____ and acknowledged the foregoing instrument to be his/her free act and deed in his/her capacity as _____of Highpine Properties, LLC, and the free act and deed of said entity.

Before me,

_____

NOTARY PUBLIC

Print Name: _____

STATE OF MAINE
DEPARTMENT OF ENVIRONMENTAL PROTECTION

PAUL R. LEPAGE
GOVERNOR

PAUL MERCER
COMMISSIONER

August 2016

Highpine Properties, LLC
C/o Jon Hall
Post Office Box 339
Wells, ME 04090

RE: Site Location of Development Act Application, Wells, DEP #L-26984-L3-A-N

Dear Mr. Hall:

Please find enclosed a signed copy of your Department of Environmental Protection land use permit. You will note that the permit includes a description of your project, findings of fact that relate to the approval criteria the Department used in evaluating your project, and conditions that are based on those findings and the particulars of your project. Please take several moments to read your permit carefully, paying particular attention to the conditions of the approval. The Department reviews every application thoroughly and strives to formulate reasonable conditions of approval within the context of the Department's environmental laws. You will also find attached some materials that describe the Department's appeal procedures for your information.

If you have any questions about the permit or thoughts on how the Department processed this application please get in touch with me directly. I can be reached at 207- 822-6300 or at robert.green@maine.gov

Sincerely,

Robert L. Green, Jr.

Robert L. Green, Jr., Project Manager
Bureau of Land Resources

pc: File

AUGUSTA
17 STATE HOUSE STATION
AUGUSTA, MAINE 04333-0017
(207) 287-7688 FAX: (207) 287-7826

BANGOR
106 HOGAN ROAD, SUITE 6
BANGOR, MAINE 04401
(207) 941-4570 FAX: (207) 941-4584

PORTLAND
312 CANCO ROAD
PORTLAND, MAINE 04103
(207) 822-6300 FAX: (207) 822-6303

PRESQUE ISLE
1235 CENTRAL DRIVE, SKYWAY PARK
PRESQUE ISLE, MAINE 04769
(207) 764-0477 FAX: (207) 760-3143

web site: www.maine.gov/dep

STATE OF MAINE
DEPARTMENT OF ENVIRONMENTAL PROTECTION
17 STATE HOUSE STATION AUGUSTA, MAINE 04333-0017

DEPARTMENT ORDER

IN THE MATTER OF

HIGHPINE PROPERTIES, LLC	) SITE LOCATION OF DEVELOPMENT ACT
Wells, York County	)
WIRE ROAD SUBDIVISION	)
L-26984-L3-A-N (approval)	) FINDINGS OF FACT AND ORDER

Pursuant to the provisions of 38 M.R.S.A. Sections 481 et seq., the Department of Environmental Protection has considered the application of HIGHPINE PROPERTIES, LLC with the supportive data, agency review comments, and other related materials on file and FINDS THE FOLLOWING FACTS:

1. PROJECT DESCRIPTION:

A. Summary: The applicant proposes to subdivide a 100-acre parcel of land into 40 residential lots ranging in size from approximately 20,020 to 31,688 square feet and three open space lots ranging in size from 0.30 to 39.46 acres, all as shown on a set of plans the first of which is entitled "Cluster Subdivision Plan, Wire Road Subdivision," prepared by Attar Engineering, Inc. and dated January 11, 2016, with a last revision date of May 13, 2016. The project site is located on the south side of Wire Road in the Town of Wells.

The applicant submitted a Natural Resources Protection Act (NRPA) Permit by Rule Notification Form (PBR #61320) for activities in significant vernal pool habitat, in accordance with NRPA Rules, Chapter 305, Section 19. PBR #61320 was accepted by the Department on March 18, 2016

B. Current Use of Site: The site of the proposed project is currently undeveloped fields and woodland. There are no structures on the property. The parcel is identified as Lot 1 on Map 75 of the Town of Wells' tax maps.

2. FINANCIAL CAPACITY:

The site development costs are estimated to be $650,000 and the total cost of the project is estimated to be $4,000,000 to 6,000,000 for building construction. The applicant submitted a letter from Enterprise Bank, dated March 11, 2016, indicating that it intends to provide financing for this project.

Prior to the start of construction, the applicant must submit evidence that it has been granted a line of credit or a loan by a financial institution authorized to do business in this State or evidence of any other form of financial assurance determined by Department Rules, Chapter 373(1), to be adequate to the Bureau of Land Resources (BLR) for review and approval.

The Department finds that the applicant has demonstrated adequate financial capacity to comply with Department standards provided that evidence of final financial assurance is submitted and approved as described above.

3. TECHNICAL ABILITY:

The applicant provided resume information for key persons involved with the project and a list of projects successfully constructed by the applicant. The applicant also retained the services of Attar Engineering, Inc., a professional engineering firm, to assist in the design and engineering of the project.

The Department finds that the applicant has demonstrated adequate technical ability to comply with Department standards.

4. NOISE:

The Department finds that no regulated sources of noise have been identified. The applicant proposes to limit construction on the site to the hours between 7:00 A.M. and 7:00 P.M. Construction noise generated during these hours is not regulated pursuant to 38 M.R.S.A. §484(3)(A).

The Department finds that the applicant has made adequate provision for the control of excessive environmental noise from the proposed project.

5. SCENIC CHARACTER:

The project site is bounded on all sides by woodland and forested wetland. Single-family residences line Wire Road. Existing wooded buffers will be maintained between the development and abutting properties. The layout of the development provides a visual buffer of trees and shrubs along Wire Road. The proposed project consists solely of residential development and open space.

Based on the project's location and design, the Department finds that the proposed project will not have an unreasonable adverse effect on the scenic character of the surrounding area.

6. WILDLIFE AND FISHERIES:

In a letter dated January 8, 2014, the Maine Department of Inland Fisheries and Wildlife (MDIFW) notified the applicant that multiple occurrences of spotted turtles, a State threatened species, and wood turtles and ribbon snakes, both species of special concern in Maine, have been documented in the vicinity of the proposed project. During a site visit on December 4, 2014, with staff biologists from MDIFW, Department staff, and the applicant, MDIFW recommended that the site be surveyed to determine the presence of turtles. Following a study plan, reviewed and accepted by MDIFW, the applicant

conducted site surveys on April 23, May 6, and May 20, 2015. In a report, dated June 5, 2015, the applicant documented that no turtles were found on the site. In comments, dated July 26, 2016, MDIFW concurred with the conclusions of the survey, that turtles were not present on site.

The applicant conducted vernal pool surveys in the spring of 2008 and 2015. Ten vernal pools were documented and two were determined to be significant vernal pools, and eligible for protection under the Department's Rules, *Significant Wildlife Habitat*, Chapter 335. The proposed project will not encroach on the critical terrestrial habitat of one significant vernal pool. The applicant proposes to alter approximately 1.93 acres of the critical terrestrial habitat of the other significant vernal pool in order to construct the access road and wet pond and to develop four house lots as shown on Sheet 1.3 of the set of plans referenced in Finding 1. This amount of disturbance represents 19.8% of the significant vernal pool habitat. Because the proposed disturbance will maintain at least 75% of the critical terrestrial habitat as unfragmented forest and will not disturb the vernal pool depression, the proposed disturbance activity is eligible for permitting under the Department's Rules, *Permit-By-Rule*, Chapter 305, Section 19. The applicant submitted a NRPA Permit-By-Rule Notification Form (PBR #61320) pursuant to Chapter 305, Section 19 which was accepted by the Department on March 18, 2016.

No fisheries concerns were identified.

The Department finds that the applicant has made adequate provision for the protection of wildlife and fisheries provided that disturbance around the significant vernal pool is limited to the area shown on Sheet 1.3 of the set of plans referenced in Finding 1.

7. HISTORIC SITES AND UNUSUAL NATURAL AREAS:

The Maine Historic Preservation Commission (MHPC) reviewed the proposed project and requested a Phase I archaeological survey to determine whether any prehistoric archaeological sites were present on the project site. In a report dated March 9, 2015, the applicant concluded that, based on the Phase I survey, a Phase II evaluative archaeological investigation of the project site was not warranted. In a letter, dated March 24, 2015, MHPC concurred with the findings of the Phase I survey and stated that the proposed project will have no effect upon any structure or site of historic, architectural, or archaeological significance as defined by the National Historic Preservation Act of 1966.

The Maine Natural Areas Program database does not contain any records documenting the existence of rare or unique botanical features on the project site and, as discussed in Finding 6, MDIFW did not identify any unusual wildlife habitats located on the project site.

The Department finds that the proposed development will not have an adverse effect on the preservation of any historic sites or unusual natural areas either on or near the development site.

8. BUFFER STRIPS:

A forested, no-disturbance stormwater buffer is proposed to provide treatment of stormwater runoff. The buffer area is shown on the set of plans referenced in Finding 1. The buffer will be protected from alteration through the execution of a deed restriction. The applicant proposes to use the deed restriction language contained in Appendix G of Chapter 500 and submitted a draft deed restriction that meets Department requirements.

Prior to the start of construction, the location of the stormwater buffer must be permanently marked on the ground. The deed for the open space lot must contain deed restrictions relative to the buffer and have attached to it a plot plan for the lot, drawn to scale, that specifies the location of the buffer on the open space lot. The applicant must execute and record the required deed restriction within 60 days of the date of this Order. The applicant shall submit a copy of the recorded deed restriction, including the plot plan, to the BLWQ within 60 days of its recording.

Provided the stormwater buffer area is protected from future disturbance as discussed above, the Department finds that the applicant has made adequate provision for buffer strips.

9. SOILS:

The applicant submitted a soil survey map and report based on the soils found at the project site. This report was prepared by a certified soils scientist and reviewed by staff from the Division of Environmental Assessment (DEA) of the Bureau of Water Quality (BWQ).

The applicant indicated blasting associated with construction of the project is likely and submitted a generic blasting plan in the application. DEA recommended that the applicant be required to submit a site-specific Blasting Plan for blasting that occurs within 500 feet of non-owned off-site structures such as buildings and wells. Prior to the start of any blasting on the project site, the applicant must submit a site map showing blast areas and a blasting plan to the BLR for review and approval. The blasting plan must be prepared by a qualified blaster, include the blasting standards contained in 38 M.R.S. § 490-Z(14), and include an anticipated blast design/shot pattern specifically tailored to the project.

If a rock crusher is being utilized on site, the applicant must ensure that the crusher is licensed by the Department's Bureau of Air Quality and is being operated in accordance with that license.

The Department finds that based on the reports and Blasting Plan submitted in the application and DEA’s review, the soils on the project site present no limitations to the proposed project that cannot be overcome through standard engineering practices

provided that a site-specific blasting plan is submitted for review and approval prior to commencement of blasting activities.

10. STORMWATER MANAGEMENT:

The proposed project includes approximately 28.1 acres of developed area of which 6.6 acres are impervious area. It lies within the watershed of Branch Brook, which empties into Little River, and the watershed of Hobbs Brook, which empties into the Merriland River. The applicant submitted a stormwater management plan based on the Basic, General, and Flooding standards contained in Department Rules, Chapter 500. The proposed stormwater management system consists of grass swales, two wet ponds, one detention pond, level lip spreaders, and a forested, no-disturbance buffer.

A. Basic Standards:

(1) Erosion and Sedimentation Control: The applicant submitted an Erosion and Sedimentation Control Plan (Section 14 of the application) that is based on the performance standards contained in Appendix A of Chapter 500 and the Best Management Practices outlined in the Maine Erosion and Sediment Control BMPs, which were developed by the Department. This plan and plan sheets containing erosion control details were reviewed by, and revised in response to the comments of, the Bureau of Land Resources (BLR).

Erosion control details will be included on the final construction plans and the erosion control narrative will be included in the project specifications to be provided to the construction contractor.

(2) Inspection and Maintenance: The applicant submitted a maintenance plan that addresses both short- and long-term maintenance requirements. The maintenance plan is based on the standards contained in Appendix B of Chapter 500. This plan was reviewed by, and revised in response to the comments of, BLR. A homeowners' association will be established that will be responsible for the maintenance of all common facilities including the stormwater management system. The Declaration of Covenants and Restrictions for the association was reviewed and found to meet Department requirements. Prior to the formation of the homeowners' association, the applicant will be responsible for all such maintenance.

Storm sewer grit and sediment materials removed from stormwater control structures during maintenance activities must be disposed of in compliance with the Maine Solid Waste Management Rules.

(3) Housekeeping: The proposed project will comply with the performance standards outlined in Appendix C of Chapter 500.

Based on BLR's review of the erosion and sedimentation control plan and the maintenance plan, the Department finds that the proposed project meets the Basic Standards contained in Chapter 500(4)(B).

B. General Standards:

The applicant's stormwater management plan includes general treatment measures that will mitigate for the increased frequency and duration of channel erosive flows due to runoff from smaller storms, provide for effective treatment of pollutants in stormwater, and mitigate potential temperature impacts. This mitigation is being achieved by using Best Management Practices (BMPs) that will control runoff from no less than 95% of the impervious area and no less than 80% of the developed area.

The forested, no disturbance stormwater buffer in open space will be protected from alteration through the execution of a deed restriction, as outlined in Finding 8.

The stormwater management system proposed by the applicant was reviewed by, and revised in response to comments from, BLR. After a final review, BLR commented that the proposed stormwater management system is designed in accordance with the General Standards contained in Chapter 500(4)(C) and recommended that the applicant’s design engineer or another qualified engineer oversee the construction of the stormwater management system to ensure that it is installed in accordance with the details and notes specified on the approved plans. Within 30 days from completion of the entire system or at least once per year, the applicant must submit a log of inspection reports detailing the items inspected, photographs taken, and the dates of each inspection to the BLR for review.

Based on the stormwater system’s design and BLR’s review, the Department finds that the applicant has made adequate provision to ensure that the proposed project will meet the General Standards contained in Chapter 500(4)(C) provided that construction of the stormwater management structures is overseen and documented as described above.

C. Flooding Standard:

The applicant is proposing to utilize a stormwater management system based on estimates of pre- and post-development stormwater runoff flows obtained by using Hydrocad, a stormwater modeling software that utilizes the methodologies outlined in Technical Releases #55 and #20, U.S.D.A., Soil Conservation Service and detains stormwater from 24-hour storms of 2-, 10-, and 25-year frequency. The post-development peak flow from the site will not exceed the pre-development peak flow from the site and the peak flow of the receiving waters will not be increased as a result of stormwater runoff from the development site.

BLR commented that the proposed system is designed in accordance with the Flooding Standard contained in Chapter 500(4)(F).

Based on the system's design and BLR's review, the Department finds that the applicant has made adequate provision to ensure that the proposed project will meet the Flooding Standard contained in Chapter 500(4)(F) for peak flow from the project site, and channel limits and runoff areas.

The Department further finds that the proposed project will meet the Chapter 500 standards for: (1) easements and covenants; (2) management of stormwater discharges; and (3) discharge to freshwater wetlands.

11. GROUNDWATER:

The project site is not located over a mapped sand and gravel aquifer. Other than drinking water, the proposed project does not propose any withdrawal from the groundwater. Wastewater will be disposed of via an onsite subsurface wastewater disposal system as described in Finding 13.

Based on DEA's review of the information discussed in Findings 12 and 13, the Department finds that the proposed project will not unreasonably deplete ground water resources. Therefore, the Department further finds that the proposed project will not have an unreasonable adverse effect on ground water quality or quantity.

12. WATER SUPPLY:

Water for the development will be supplied by individual wells. The applicant submitted an assessment of groundwater supplies that are available on the project site and an analysis of potential impacts to on-site wells resulting from on-site wastewater disposal. These assessments were prepared by a certified geologist and were reviewed by, and revised in response to comments from, the DEA.

DEA stated that water supply well casings must be set and grouted a minimum of 20 feet into the solid bedrock surface, if bedrock is encountered at a depth less than 10 feet. Wells must not be located in the exclusion areas identified on the Grading and Utility Plans, included in the set of plans referenced in Finding 1.

Provided individual wells areas are protected as discussed above, the Department finds that the applicant has made adequate provision for securing and maintaining a sufficient and healthful water supply.

13. WASTEWATER DISPOSAL:

Wastewater will be disposed of by an engineered subsurface wastewater disposal system. The applicant submitted the soil survey map and report discussed in Finding 9 and an analysis of potential impacts to off-site groundwater quality resulting from on-site wastewater disposal prepared by a certified geologist. The engineered wastewater disposal system, which receives more than 2,000 gallons of wastewater per day, received approval from the Department of Health and Human Services, Division of Environmental

Health Subsurface Wastewater Unit (DHHS-DEH) on May 16, 2016. This information was reviewed by, and revised in response to comments from, DEA.

Based on DEA's and DHHS-DEH's comments, the Department finds that the proposed wastewater disposal system will be built on suitable soil types and that Maine's Drinking Water Standard for nitrates will be met at the project's property lines.

14. SOLID WASTE:

When completed, the proposed project is anticipated to generate 40 cubic yards of household solid waste per year. All general solid wastes from the proposed project will be disposed of at the Town of Wells Transfer Station, which is currently in substantial compliance with the Maine Solid Waste Management Rules.

The proposed project will generate approximately 20,000 cubic yards of stumps and grubbings. All stumps and grubbings generated will be ground on site and the resulting material utilized for erosion control, in compliance with Maine Solid Waste Management Rules.

The proposed project will generate approximately 600 cubic yards of construction debris and demolition debris. All construction and demolition debris generated will be disposed of at Jeff Simpson, Inc. in Sanford, Aggregate Recycling in Eliot, or the Town of Wells Transfer Station, all of which are currently in substantial compliance with the Maine Solid Waste Management Rules.

Based on the above information, the Department finds that the applicant has made adequate provision for solid waste disposal.

15. FLOODING:

The proposed project is not located within the 100-year flood plain of any river or stream.

The Department finds that the proposed project is unlikely to cause or increase flooding or cause an unreasonable flood hazard to any structure.

BASED on the above findings of fact, and subject to the conditions listed below, the Department makes the following conclusions pursuant to 38 M.R.S.A. Sections 481 et seq.:

A. The applicant has provided adequate evidence of financial capacity and technical ability to develop the project in a manner consistent with state environmental standards provided that final financial evidence is submitted to the BLWQ for review and approval, as outlined in Finding 2.

B. The applicant has made adequate provision for fitting the development harmoniously into the existing natural environment and the development will not adversely affect existing

uses, scenic character, air quality, water quality or other natural resources in the municipality or in neighboring municipalities provided that disturbance around the significant vernal pool is limited to the area shown on Sheet 1.3 of the set of plans referenced in Finding 1.

C. The proposed development will be built on soil types which are suitable to the nature of the undertaking and will not cause unreasonable erosion of soil or sediment nor inhibit the natural transfer of soil provided that a site-specific blasting plan is submitted for review and approval prior to commencement of blasting activities.

D. The proposed development meets the standards for storm water management in Section 420-D and the standard for erosion and sedimentation control in Section 420-C provided that sewer grit and sediment are disposed of properly, the stormwater buffer is marked and protected, and that the installation of stormwater components is overseen and documented as described in Finding 10.

E. The proposed development will not pose an unreasonable risk that a discharge to a significant groundwater aquifer will occur.

F. The applicant has made adequate provision of utilities, including water supplies, sewerage facilities and solid waste disposal required for the development and the development will not have an unreasonable adverse effect on the existing or proposed utilities in the municipality or area served by those services provided that water wells are cased as described in Finding 12.

G. The activity will not unreasonably cause or increase the flooding of the alteration area or adjacent properties nor create an unreasonable flood hazard to any structure.

THEREFORE, the Department APPROVES the application of HIGHPINE PROPERTIES, LLC to construct a 43-lot residential subdivision as described in Finding 1, SUBJECT TO THE FOLLOWING CONDITIONS and all applicable standards and regulations:

1. The Standard Conditions of Approval, a copy attached.

2. In addition to any specific erosion control measures described in this or previous orders, the applicant shall take all necessary actions to ensure that its activities or those of its agents do not result in noticeable erosion of soils or fugitive dust emissions on the site during the construction and operation of the project covered by this approval.

3. Severability. The invalidity or unenforceability of any provision, or part thereof, of this License shall not affect the remainder of the provision or any other provisions. This License shall be construed and enforced in all respects as if such invalid or unenforceable provision or part thereof had been omitted.

4. The applicant shall include in all conveyances of subdivision lots deed restrictions making the conveyance subject to all terms and conditions of this Department permit and any applicable municipal approval. These terms and conditions may be incorporated by specific and prominent reference to the permit in the deed. All conveyances required by this approval to contain restrictions shall include in the restrictions the requirement that any subsequent conveyance shall specifically include the same restrictions.

5. The applicant shall give a copy of this permit, including the standard conditions and a copy of the approved subdivision plan to each lot buyer at least 14 days prior to the date of closing on the sale or lease of the lot. The applicant also shall maintain a file containing signed and dated statements by lot buyers or lessees acknowledging that they have received and read their copy of this permit and the subdivision plan prior to the closing on their lot. The file shall also contain a copy of the signed and dated deed or lease containing the restrictive covenants required under this approval. The applicant shall make this file available for inspection upon request by the Department.

6. Prior to starting construction, the applicant shall submit final cost estimates and evidence that it has been granted a line of credit or a loan by a financial institution authorized to do business in this State or evidence of any other form of financial assurance determined by Department Rules, Chapter 373(1), to be adequate to the BLR for review and approval.

7. The deed for the open space lot must contain deed restrictions relative to the buffer and have attached to it a plot plan for the lot, drawn to scale, that specifies the location of the buffer on the open space lot. The applicant must execute and record the required deed restriction within 60 days of the date of this Order. The applicant shall submit a copy of the recorded deed restriction, including the plot plan, to the BLR within 60 days of its recording.

8. Prior to the start of construction, the location of the stormwater forested buffer shall be permanently marked on the ground.

9. Prior to the start of any blasting on the project site within 500 feet of non-owned off-site structures such as buildings and wells, the applicant shall submit a site-specific Blasting Plan to the BLR for review and approval.

10. The applicant shall retain its design engineer or another qualified engineer to oversee the construction of the stormwater management system according to the details and notes specified on the approved plans. Within 30 days of completion of the entire system or at least once per year, the applicant shall submit a log of inspection reports detailing the items inspected, photographs taken, and dates of each inspection to the BLR for review.

11. Storm sewer grit and sediment materials removed from stormwater structures during maintenance activities shall be disposed of in compliance with the Maine Solid Waste Management Rules.

12. Water supply well casings shall be set and grouted a minimum of 20 feet into the solid bedrock surface, if bedrock is encountered at a depth less than 10 feet.

THIS APPROVAL DOES NOT CONSTITUTE OR SUBSTITUTE FOR ANY OTHER REQUIRED STATE, FEDERAL OR LOCAL APPROVALS NOR DOES IT VERIFY COMPLIANCE WITH ANY APPLICABLE SHORELAND ZONING ORDINANCES.

DONE AND DATED IN AUGUSTA, MAINE, THIS 12TH DAY OF AUGUST, 2016.

DEPARTMENT OF ENVIRONMENTAL PROTECTION

BY: _____
For: Paul Mercer, Commissioner

Filed
AUG 12 2016
State of Maine
Board of Environmental Protection

PLEASE NOTE THE ATTACHED SHEET FOR GUIDANCE ON APPEAL PROCEDURES.

RLG/L26984AN/ATS#80336

Department of Environmental Protection

SITE LOCATION OF DEVELOPMENT (SITE) STANDARD CONDITIONS

A. Approval of Variations from Plans. The granting of this approval is dependent upon and limited to the proposals and plans contained in the application and supporting documents submitted and affirmed to by the applicant. Any variation from these plans, proposals, and supporting documents is subject to review and approval prior to implementation. Further subdivision of proposed lots by the applicant or future owners is specifically prohibited without prior approval of the Board, and the applicant shall include deed restrictions to that effect.

B. Compliance with All Applicable Laws. The applicant shall secure and comply with all applicable federal, state, and local licenses, permits, authorizations, conditions, agreements, and orders prior to or during construction and operation, as appropriate.

C. Compliance with All Terms and Conditions of Approval. The applicant shall submit all reports and information requested by the Board or the Department demonstrating that the applicant has complied or will comply with all preconstruction terms and conditions of this approval. All preconstruction terms and conditions must be met before construction begins.

D. Advertising. Advertising relating to matters included in this application shall refer to this approval only if it notes that the approval has been granted WITH CONDITIONS, and indicates where copies of those conditions may be obtained.

E. Transfer of Development. Unless otherwise provided in this approval, the applicant shall not sell, lease, assign or otherwise transfer the development or any portion thereof without prior written approval of the Board where the purpose or consequence of the transfer is to transfer any of the obligations of the developer as incorporated in this approval. Such approval shall be granted only if the applicant or transferee demonstrates to the Board that the transferee has the technical capacity and financial ability to comply with conditions of this approval and the proposals and plans contained in the application and supporting documents submitted by the applicant.

F. Time frame for approvals. If the construction or operation of the activity is not begun within four years, this approval shall lapse and the applicant shall reapply to the Board for a new approval. The applicant may not begin construction or operation of the development until a new approval is granted. A reapplication for approval may include information submitted in the initial application by reference. This approval, if construction is begun within the four-year time frame, is valid for seven years. If construction is not completed within the seven-year time frame, the applicant must reapply for, and receive, approval prior to continuing construction.

G. Approval Included in Contract Bids. A copy of this approval must be included in or attached to all contract bid specifications for the development.

H. Approval Shown to Contractors. Work done by a contractor pursuant to this approval shall not begin before the contractor has been shown by the developer a copy of this approval.

(2/81)/Revised December 27, 2011

STORMWATER STANDARD CONDITIONS

STRICT CONFORMANCE WITH THE STANDARD AND SPECIAL CONDITIONS OF THIS APPROVAL IS NECESSARY FOR THE PROJECT TO MEET THE STATUTORY CRITERIA FOR APPROVAL

Standard conditions of approval. Unless otherwise specifically stated in the approval, a department approval is subject to the following standard conditions pursuant to Chapter 500 Stormwater Management Law.

(1) Approval of variations from plans. The granting of this approval is dependent upon and limited to the proposals and plans contained in the application and supporting documents submitted and affirmed to by the applicant. Any variation from these plans, proposals, and supporting documents must be reviewed and approved by the department prior to implementation. Any variation undertaken without approval of the department is in violation of 38 M.R.S.A. §420-D(8) and is subject to penalties under 38 M.R.S.A. §349.

(2) Compliance with all terms and conditions of approval. The applicant shall submit all reports and information requested by the department demonstrating that the applicant has complied or will comply with all terms and conditions of this approval. All preconstruction terms and conditions must be met before construction begins.

(3) Advertising. Advertising relating to matters included in this application may not refer to this approval unless it notes that the approval has been granted WITH CONDITIONS, and indicates where copies of those conditions may be obtained.

(4) Transfer of project. Unless otherwise provided in this approval, the applicant may not sell, lease, assign, or otherwise transfer the project or any portion thereof without written approval by the department where the purpose or consequence of the transfer is to transfer any of the obligations of the developer as incorporated in this approval. Such approval may only be granted if the applicant or transferee demonstrates to the department that the transferee agrees to comply with conditions of this approval and the proposals and plans contained in the application and supporting documents submitted by the applicant. Approval of a transfer of the permit must be applied for no later than two weeks after any transfer of property subject to the license.

(5) Time frame for approvals. If the construction or operation of the activity is not begun within four years, this approval shall lapse and the applicant shall reapply to the department for a new approval. The applicant may not begin construction or operation of the project until a new approval is granted. A reapplication for approval may include information submitted in the initial application by reference. This approval, if construction is begun within the four-year time frame, is valid for seven years. If construction is not completed within the seven-year time frame, the applicant must reapply for, and receive, approval prior to continuing construction.

(6) Certification. Contracts must specify that "all work is to comply with the conditions of the Stormwater Permit." Work done by a contractor or subcontractor pursuant to this approval may not begin before the contractor and any subcontractors have been shown a copy of this approval with the conditions by the developer, and the owner and each contractor and subcontractor has certified, on a form provided by the department, that the approval and conditions have been received and read, and that the work will be carried out in accordance

with the approval and conditions. Completed certification forms must be forwarded to the department.

(7) Maintenance. The components of the stormwater management system must be adequately maintained to ensure that the system operates as designed, and as approved by the department.

(8) Recertification requirement. Within three months of the expiration of each five-year interval from the date of issuance of the permit, the permittee shall certify the following to the department.

(a) All areas of the project site have been inspected for areas of erosion, and appropriate steps have been taken to permanently stabilize these areas.

(b) All aspects of the stormwater control system have been inspected for damage, wear, and malfunction, and appropriate steps have been taken to repair or replace the facilities.

(c) The erosion and stormwater maintenance plan for the site is being implemented as written, or modifications to the plan have been submitted to and approved by the department, and the maintenance log is being maintained.

(9) Severability. The invalidity or unenforceability of any provision, or part thereof, of this permit shall not affect the remainder of the provision or any other provisions. This permit shall be construed and enforced in all respects as if such invalid or unenforceable provision or part thereof had been omitted.

November 16, 2005 (revised December 27, 2011)

DEP INFORMATION SHEET

Appealing a Department Licensing Decision

Dated: March 2012 **Contact: (207) 287-2811**

SUMMARY

There are two methods available to an aggrieved person seeking to appeal a licensing decision made by the Department of Environmental Protection's ("DEP") Commissioner: (1) in an administrative process before the Board of Environmental Protection ("Board"); or (2) in a judicial process before Maine's Superior Court. An aggrieved person seeking review of a licensing decision over which the Board had original jurisdiction may seek judicial review in Maine's Superior Court.

A judicial appeal of final action by the Commissioner or the Board regarding an application for an expedited wind energy development (35-A M.R.S.A. § 3451(4)) or a general permit for an offshore wind energy demonstration project (38 M.R.S.A. § 480-HH(1)) or a general permit for a tidal energy demonstration project (38 M.R.S.A. § 636-A) must be taken to the Supreme Judicial Court sitting as the Law Court.

This INFORMATION SHEET, in conjunction with a review of the statutory and regulatory provisions referred to herein, can help a person to understand his or her rights and obligations in filing an administrative or judicial appeal.

I. ADMINISTRATIVE APPEALS TO THE BOARD

LEGAL REFERENCES

The laws concerning the DEP's *Organization and Powers*, 38 M.R.S.A. §§ 341-D(4) & 346, the *Maine Administrative Procedure Act*, 5 M.R.S.A. § 11001, and the DEP's *Rules Concerning the Processing of Applications and Other Administrative Matters* ("Chapter 2"), 06-096 CMR 2 (April 1, 2003).

HOW LONG YOU HAVE TO SUBMIT AN APPEAL TO THE BOARD

The Board must receive a written appeal within 30 days of the date on which the Commissioner's decision was filed with the Board. Appeals filed after 30 calendar days of the date on which the Commissioner's decision was filed with the Board will be rejected.

HOW TO SUBMIT AN APPEAL TO THE BOARD

Signed original appeal documents must be sent to: Chair, Board of Environmental Protection, c/o Department of Environmental Protection, 17 State House Station, Augusta, ME 04333-0017; faxes are acceptable for purposes of meeting the deadline when followed by the Board's receipt of mailed original documents within five (5) working days. Receipt on a particular day must be by 5:00 PM at DEP's offices in Augusta; materials received after 5:00 PM are not considered received until the following day. The person appealing a licensing decision must also send the DEP's Commissioner a copy of the appeal documents and if the person appealing is not the applicant in the license proceeding at issue the applicant must also be sent a copy of the appeal documents. All of the information listed in the next section must be submitted at the time the appeal is filed. Only the extraordinary circumstances described at the end of that section will justify evidence not in the DEP's record at the time of decision being added to the record for consideration by the Board as part of an appeal.

WHAT YOUR APPEAL PAPERWORK MUST CONTAIN

Appeal materials must contain the following information at the time submitted:

1. *Aggrieved Status*. The appeal must explain how the person filing the appeal has standing to maintain an appeal. This requires an explanation of how the person filing the appeal may suffer a particularized injury as a result of the Commissioner's decision.
2. *The findings, conclusions or conditions objected to or believed to be in error*. Specific references and facts regarding the appellant's issues with the decision must be provided in the notice of appeal.
3. *The basis of the objections or challenge.* If possible, specific regulations, statutes or other facts should be referenced. This may include citing omissions of relevant requirements, and errors believed to have been made in interpretations, conclusions, and relevant requirements.
4. *The remedy sought.* This can range from reversal of the Commissioner's decision on the license or permit to changes in specific permit conditions.
5. *All the matters to be contested*. The Board will limit its consideration to those arguments specifically raised in the written notice of appeal.
6. *Request for hearing.* The Board will hear presentations on appeals at its regularly scheduled meetings, unless a public hearing on the appeal is requested and granted. A request for public hearing on an appeal must be filed as part of the notice of appeal.
7. *New or additional evidence to be offered.* The Board may allow new or additional evidence, referred to as supplemental evidence, to be considered by the Board in an appeal only when the evidence is relevant and material and that the person seeking to add information to the record can show due diligence in bringing the evidence to the DEP's attention at the earliest possible time in the licensing process <u>or</u> that the evidence itself is newly discovered and could not have been presented earlier in the process. Specific requirements for additional evidence are found in Chapter 2.

OTHER CONSIDERATIONS IN APPEALING A DECISION TO THE BOARD

1. *Be familiar with all relevant material in the DEP record.* A license application file is public information, subject to any applicable statutory exceptions, made easily accessible by DEP. Upon request, the DEP will make the material available during normal working hours, provide space to review the file, and provide opportunity for photocopying materials. There is a charge for copies or copying services.
2. *Be familiar with the regulations and laws under which the application was processed, and the procedural rules governing your appeal.* DEP staff will provide this information on request and answer questions regarding applicable requirements.
3. *The filing of an appeal does not operate as a stay to any decision.* If a license has been granted and it has been appealed the license normally remains in effect pending the processing of the appeal. A license holder may proceed with a project pending the outcome of an appeal but the license holder runs the risk of the decision being reversed or modified as a result of the appeal.

WHAT TO EXPECT ONCE YOU FILE A TIMELY APPEAL WITH THE BOARD

The Board will formally acknowledge receipt of an appeal, including the name of the DEP project manager assigned to the specific appeal. The notice of appeal, any materials accepted by the Board Chair as supplementary evidence, and any materials submitted in response to the appeal will be sent to Board members with a recommendation from DEP staff. Persons filing appeals and interested persons are notified in advance of the date set for Board consideration of an appeal or request for public hearing. With or without holding a public hearing, the Board may affirm, amend, or reverse a Commissioner decision or remand the matter to the Commissioner for further proceedings. The Board will notify the appellant, a license holder, and interested persons of its decision.

II. JUDICIAL APPEALS

Maine law generally allows aggrieved persons to appeal final Commissioner or Board licensing decisions to Maine's Superior Court, see 38 M.R.S.A. § 346(1); 06-096 CMR 2; 5 M.R.S.A. § 11001; & M.R. Civ. P 80C. A party's appeal must be filed with the Superior Court within 30 days of receipt of notice of the Board's or the Commissioner's decision. For any other person, an appeal must be filed within 40 days of the date the decision was rendered. Failure to file a timely appeal will result in the Board's or the Commissioner's decision becoming final.

An appeal to court of a license decision regarding an expedited wind energy development, a general permit for an offshore wind energy demonstration project, or a general permit for a tidal energy demonstration project may only be taken directly to the Maine Supreme Judicial Court. See 38 M.R.S.A. § 346(4).

Maine's Administrative Procedure Act, DEP statutes governing a particular matter, and the Maine Rules of Civil Procedure must be consulted for the substantive and procedural details applicable to judicial appeals.

ADDITIONAL INFORMATION

If you have questions or need additional information on the appeal process, for administrative appeals contact the Board's Executive Analyst at (207) 287-2452 or for judicial appeals contact the court clerk's office in which your appeal will be filed.

Note: The DEP provides this INFORMATION SHEET for general guidance only; it is not intended for use as a legal reference. Maine law governs an appellant's rights.

WIRE ROAD SUBDIVISION

WIRE ROAD, WELLS, MAINE

GENERAL NOTES

1. THIS PLAN SHOWS THE LAYOUT FOR THE PROPOSED WIRE ROAD SUBDIVISION LOCATED AT WIRE ROAD, WELLS, MAINE. THE DEVELOPMENT CONSISTS OF 40 DWELLING UNITS AND ASSOCIATED INFRASTRUCTURE IMPROVEMENTS. THE PROPOSED DEVELOPMENT IS A RESIDENTIAL CLUSTER SUBDIVISION.

2. DEVELOPMENT WILL OCCUR ON THE TOWN OF WELLS TAX MAP 75 LOT 1 IN THE RURAL (R) DISTRICT. THE LOT IS 100.26 ACRES IN AREA AND OWNED BY HIGHPINE PROPERTIES, LLC PER DEED RECORDED AT THE YCRD BOOK 15311, PAGE 360.

DISTRICT REQUIREMENTS FOR THE RURAL DISTRICT (NON–CLUSTER LOTS) ARE AS FOLLOWS:
MIN LOT SIZE: 100,000 S.F (NO PUBLIC SEWER); 40,000 S.F. IF SERVED BY PUBLIC SEWER AND EAST OF THE MAINE TURNPIKE
SETBACKS: 25' FROM ANY LOT LINE
25' FROM ANY LOT LINE ABUTTING A STREET RIGHT–OF–WAY
40' FROM ANY LOT LINE ABUTTING A STATE HIGHWAY RIGHT–OF–WAY
MAXIMUM LOT COVERAGE: 40% AS PERMITTED BY 145–49.C(5).
MAXIMUM BUILDING HEIGHT: 40' MAXIMUM AND NOT TO EXCEED 3 STORIES
MINIMUM STREET FRONTAGE: 200 FEET OR 150 FEET FOR FRONTAGE ENTIRELY ON A CUL–DE–SAC

THE PROJECT SITE INCLUDES APPROXIMATELY 1690' OF STREET FRONTAGE ON WIRE ROAD.

3. DIMENSIONAL REQUIREMENTS FOR THE PROPOSED CLUSTER SUBDIVISION LOTS ARE AS FOLLOWS:
MIN LOT SIZE: 20,000 S.F. (NO PUBLIC SEWER)
SETBACKS: 15' FROM ANY LOT LINE; 20' FROM A STREET RIGHT–OF–WAY; OR GREATER SETBACK PER WELLS SUBDIVISION ORDINANCE SECTION 145–49(C)(2), AS NOTED ON THE PLAN.
50' SETBACK/BUFFER FROM NON–CLUSTERED RESIDENTIAL LOT (2X SETBACK) 145–49(C)(4)
MIN STREET FRONTAGE: 50'

4. DENSITY CALCULATION:
LOT AREA = 100.26 ACRES
LESS 15% FOR ROADS AND PARKING = 85.22 ACRES
LOTS ALLOWED: (85.22 AC. X 43,560 S.F./AC.) / 100.000 S.F. PER LOT = 37.1 LOTS.

OPEN SPACE BONUS (GRANTED BY PLANNING BOARD ON 2/22/16):
145–49.D(1): 10% BONUS FOR OPEN SPACE 50% OR MORE: 37 LOTS X 1.1 = 40.7 (40 LOTS PROPOSED)
73.7 ACRES (73%) DEDICATED OPEN SPACE PROPOSED.

5. WATER SERVICE SHALL BE PROVIDED BY INDIVIDUAL, PRIVATE, DRILLED WELLS TO BE PLACED ON PROPOSED LOTS. WELL LOCATIONS ARE LIMITED BY A 300' SEPARATION DISTANCE TO SUBSURFACE WASTEWATER DISPOSAL SYSTEMS AND RESERVE AREAS. OTHER WELL EXCLUSION AREAS ARE ALSO NOTED ON THE PLANS. WELLS SHALL BE INSTALLED WITH CASING SET A MINIMUM OF 15' BELOW SOLID BEDROCK SURFACE, PER THE HYDROGEOLOGIC REPORT (SEE NOTE 17). CASING DEPTH INTO BEDROCK SHALL BE INCREASED TO 20' IF THE BEDROCK SURFACE DEPTH IS 10' OR LESS. DUG WELLS ARE PROHIBITED. SEWER SERVICE SHALL BE PROVIDED BY A CENTRALIZED, PRIVATE, ON–SITE, SUBSURFACE WASTEWATER DISPOSAL SYSTEM (SSWDS), GRAVITY EFFLUENT COLLECTION SYSTEM AND EFFLUENT PUMP STATION (SEE MAINE DHHS APPROVAL LETTER DATED 5/16/16). SEPTIC TANKS SHALL BE INSTALLED ON LOTS PER SSWDS NOTE 1 ON SHEET 5.4.

6. THE CONTRACTOR MUST CONTACT DIG SAFE AND ALL LOCAL UTILITIES PRIOR TO THE START OF CONSTRUCTION TO VERIFY THE LOCATION OF EXISTING SUBSURFACE UTILITIES AND CONDITIONS. LOCATING AND PROTECTING ANY UNDERGROUND OR ABOVE GROUND UTILITY IS THE SOLE RESPONSIBILITY OF THE CONTRACTOR.

7. PROPOSED SIGNS SHALL COMPLY WITH THE REQUIREMENTS OF CHAPTER 145, SECTION 40 FROM THE TOWN CODE OF WELLS, MAINE. SIGNS MAY BE ILLUMINATED AS ALLOWED BY THE REFERENCED SECTION.

8. EXISTING, OFF–SITE, STRUCTURES SHOWN ON THIS PLAN ARE IN APPROXIMATE LOCATIONS.

9. SNOW STORAGE AREAS ARE DEPICTED ON THE PLANS. IF THE DESIGNATED SNOW STORAGE AREAS ARE INADEQUATE DUE TO LARGE OR MULTIPLE STORM EVENTS, EXCESS SNOW MAY NEED TO BE REMOVED FROM THE SITE AND DISPOSED OF LEGALLY. DRIVEWAYS, PARKING AREAS, SIDEWALKS AND FIRE LANES SHALL BE KEPT CLEAR OF SNOW.

10. THIS PROJECT IS SUBJECT TO A MAINE DEPARTMENT OF ENVIRONMENTAL PROTECTION (MDEP) SITE LOCATION OF DEVELOPMENT PERMIT (L–026984–L3–A–N). INSPECTION AND MAINTENANCE OF THE STORMWATER INFRASTRUCTURE IS REQUIRED AS A CONDITION OF THE PERMIT. THESE REQUIREMENTS ARE STATED IN THE "OPERATION AND MAINTENANCE PROGRAM – STORMWATER MANAGEMENT BMP'S" SECTION OF THE STORMWATER MANAGEMENT PLAN – WIRE ROAD SUBDIVISION, PREPARED BY ATTAR ENGINEERING, INC.

11. ON–SITE UTILITIES SHALL BE INSTALLED UNDERGROUND. TRANSFORMER LOCATIONS MAY VARY BASED ON CMP REQUIREMENTS. RELOCATION OF TRANSFORMERS AND ASSOCIATED EASEMENTS DO NOT CONSTITUTE OR REQUIRE AN AMENDMENT TO THE APPROVAL. UNDERGROUND UTILITIES SHALL BE INSTALLED PRIOR TO THE INSTALLATION OF THE FINAL GRAVEL BASE OF THE ROAD.

12. PERFORMANCE GUARANTEES SHALL BE ESTABLISHED BY THE APPLICANT PRIOR TO CONSTRUCTION IN THE FORM OF CASH ESCROWS FOR THE FOLLOWING ITEMS:
a. THIRD PARTY INSPECTIONS, SOIL DISTURBANCE ($ 3,500/ACRE), MONUMENTATION AND AS–BUILT SURVEY;
b. PRIOR TO A BUILDING PERMIT BEING ISSUED, ROADWAY CONSTRUCTION TO INCLUDE GRAVEL BASE, UTILITIES AND DRAINAGE SYSTEM;
c. PRIOR TO AN OCCUPANCY PERMIT BEING ISSUED, THE BASE COAT OF PAVEMENT TO BE INSTALLED AND ESCROW TO BE ESTABLISHED FOR THE FINISH COURSE OF PAVEMENT AND ALL INCOMPLETE REQUIREMENTS OF THE APPROVED PLANS.
THE ESCROW(S) SHALL BE APPROVED BY THE TOWN MANAGER AND TOWN ENGINEER.

13. ALL STREETS IN THIS SUBDIVISION SHALL REMAIN PRIVATE AND BE MAINTAINED TO TOWN STANDARDS BY THE DEVELOPER OR THE HOMEOWNER'S ASSOCIATION AND SHALL NOT BE MAINTAINED BY THE TOWN, UNLESS FORMALLY ADOPTED/ACCEPTED BY THE TOWN OF WELLS AS TOWN STREETS. PARKING IS PROHIBITED ALONG WIRE ROAD, CAMERONS LANE AND BRENDANS WAY. DRIVEWAYS ARE PROHIBITED ONTO WIRE ROAD. LOTS 5, 6, 17 AND 18 MAY HAVE DRIVEWAYS ON EITHER CAMERONS LANE OR BRENDANS WAY.

14. PLAN ORIENTATION IS MAGNETIC NORTH. SEE NOTE 1, SHEET 1.5.

15. THE PROPERTY IS NOT LOCATED WITHIN A FLOOD ZONE (SOURCE: FEMA FLOOD INSURANCE RATE MAP; TOWN OF WELLS, MAINE, YORK COUNTY; MAP NUMBER 2301580010D; MAP REVISED 1/16/03).

16. THE OPEN SPACE DEPICTED ON THE PLANS MAY NOT BE USED FOR FUTURE LOTS OR DWELLING UNITS, UNLESS APPROVED BY THE WELLS PLANNING BOARD AS PART OF A PLAN AMENDMENT.

17. A GROUNDWATER NITRATE EVALUATION AND MOUNDING & TRANSMISSION ANALYSIS/REPORT FOR THE PROJECT WAS PREPARED BY SEVEE & MAHER ENGINEERS, INC. THIS REPORT IS DATED 1/12/16.

18. THE SUBDIVISION APPROVAL IS LIMITED TO TAX MAP 75, LOT 1 (SHEET 1.5). ADJACENT PROPERTY OWNED BY HIGHPINE PROPERTIES, LLC ARE NOT SUBJECT TO THIS APPROVAL BUT ARE SUBJECT TO MRSA 30–A, §4401.

19. VERNAL POOL / WETLAND IDENTIFICATION BY WOODLOT ALTERNATIVES, INC./STANTEC. SEE REPORTS DATED 9/10/07, 6/16/08 AND 6/5/15.

20. THE OPEN SPACE SHALL BE PRESERVED IN ITS NATURAL CONDITION EXCEPT WHERE APPROVED TO BE ALTERED, AS SHOWN ON THE PLANS. THE OPEN SPACE SHALL BE MANAGED BY THE HOMEOWNER'S ASSOCIATION. UNLESS OTHERWISE INDICATED ON THE PLANS, USE OF THE OPEN SPACE IS LIMITED TO PASSIVE RECREATION. ANY CHANGE IN USE OF THE OPEN SPACE REQUIRES APPROVAL OF THE WELLS PLANNING BOARD (SUBDIVISION PLAN AMENDMENT). A SINGLE ACCESSORY STRUCTURE NOT EXCEEDING 600 S.F. IS PERMITTED IN THE OPEN SPACE AND REQUIRES A BUILDING PERMIT. NO MORE THE 2% OF THE OPEN SPACE SHALL BE IMPERVIOUS AREA.

21. ALL TEST PITS WERE PERFORMED AND LOGGED BY MICHAEL CUOMO, ME CSS #211. TEST PITS LOGS AND OTHER SOIL INFORMATION CAN BE FOUND IN A HIGH INTENSITY SOIL SURVEY REPORT, PREPARED BY MICHAEL CUOMO, DATED DECEMBER, 2015.

22. EXISTING VEGETATION SHALL BE PRESERVED WITHIN A 25' BUFFER ALONG WIRE ROAD WITH THE FOLLOWING EXCEPTIONS: DEAD, DYING OR DISEASED VEGETATION; UNDERBRUSH (STEM DIAMETER 1", OR LESS); LARGE TREES THAT COULD PRESENT A HAZARD TO STRUCTURES; CLEARING NECESSARY TO CONSTRUCT THE GRADING DEPICTED ON THE PLANS. HARDWOOD TREES IDENTIFIED ALONG WIRE ROAD GREATER THAN 24" IN DIAMETER AT BREAST HEIGHT SHALL BE MAINTAINED ON LOTS 1A–6 AND 1A–8.

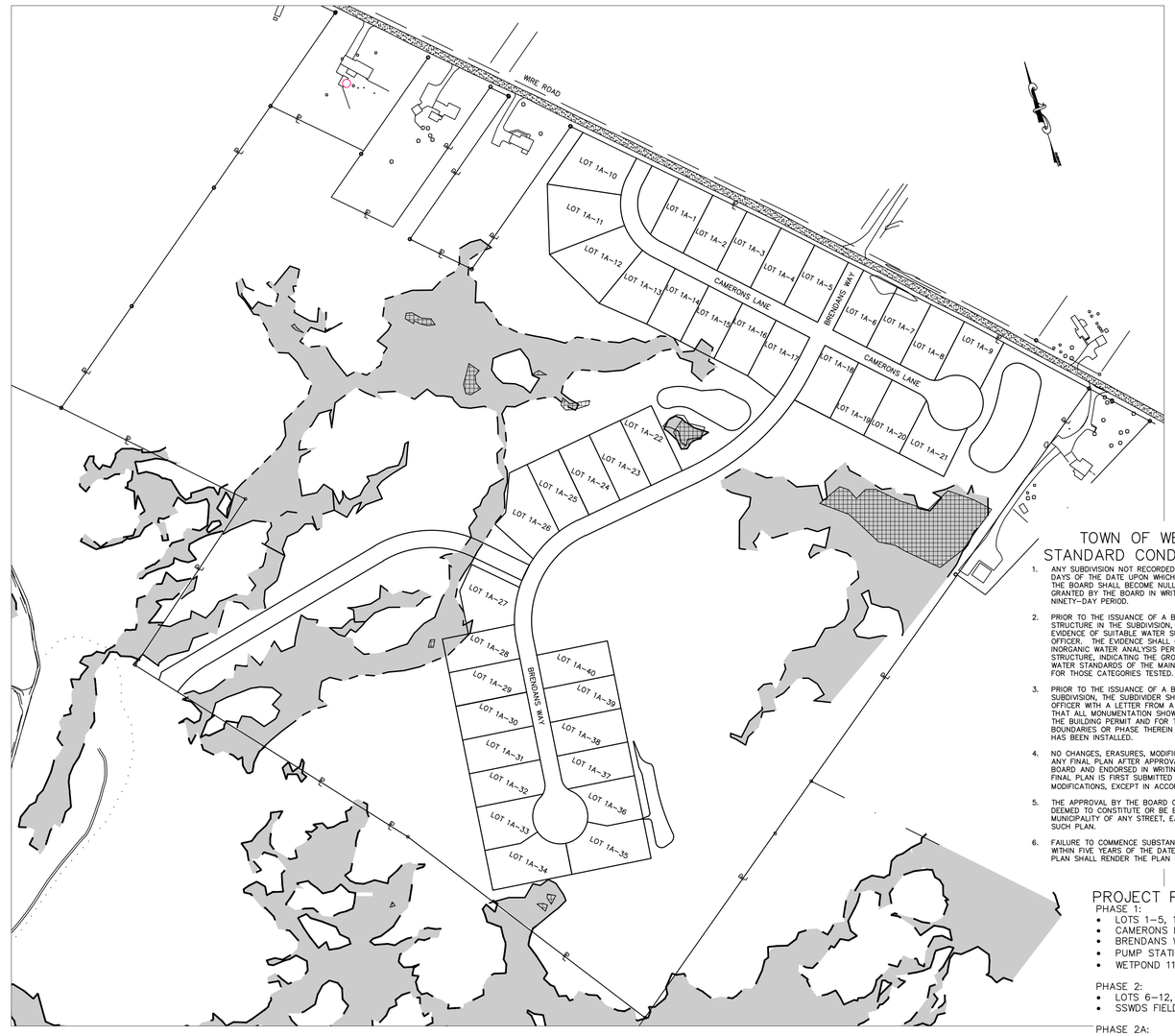

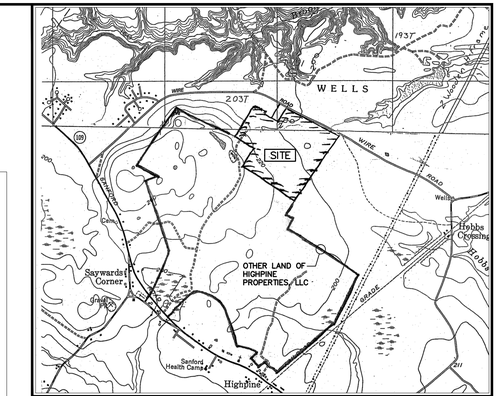

SITE LOCATION MAP
APPROXIMATE SCALE 1" = 2000'

LEGEND

EXISTING CONTOUR	XXX
FINAL CONTOUR	XXX
WETLAND BOUNDARY	UPLAND / WETLAND
UTILITY POLE	EXT. / PRP.
EXT. WATER	EW
EXT. SEWER	ES
EXT. OVERHEAD UTIL.	EOHU
EXT. UNDERGROUND UTIL.	EUU
PRP. WATER	PW
PRP. SEWER	PS
PRP. FORCE MAIN	FM
PRP. UTILITY	P UG/OHU
WATER VALVE	EXT. / PRP.
WATER SHUTOFF	
SEWER MANHOLE	
LIGHT POLE	EXT. / PRP.
SILTATION FENCE	
PROPOSED FENCE	
EXISTING FENCE	
ASPHALT CURB	
EXISTING CURB	
PROPOSED GUARDRAIL	
BOLLARD	
FIRE HYDRANT	EXT. / PRP.
DRAINAGE EASEMENT	
DIRECTION OF DRAINAGE	
TREELINE	
TEST PIT	(SUITABLE) / (UNSUITABLE)
DRILL HOLE OR REBAR WITH CAP TO BE SET	
STONE OR CONCRETE MONUMENT OR DRILL HOLE TO BE SET	
FOUND IRON PIPE/ROD	FIP/FIR
FOUND DRILL HOLE	FDH
FOUND CONCRETE/GRANITE BOUND	FCB/FGB

TOWN OF WELLS SUBDIVISION STANDARD CONDITIONS OF APPROVAL

1. ANY SUBDIVISION NOT RECORDED IN THE REGISTRY OF DEEDS WITHIN 90 DAYS OF THE DATE UPON WHICH THE PLAN IS APPROVED AND SIGNED BY THE BOARD SHALL BECOME NULL AND VOID, UNLESS AN EXTENSION IS GRANTED BY THE BOARD IN WRITING BEFORE THE EXPIRATION OF THE NINETY–DAY PERIOD.
2. PRIOR TO THE ISSUANCE OF A BUILDING PERMIT FOR A PRINCIPAL STRUCTURE IN THE SUBDIVISION, THE APPLICANT SHALL PRESENT EVIDENCE OF SUITABLE WATER SUPPLY TO THE CODE ENFORCEMENT OFFICER. THE EVIDENCE SHALL CONSIST OF THE RESULTS OF A PRIMARY INORGANIC WATER ANALYSIS PERFORMED UPON THE WELL TO SERVE THE STRUCTURE, INDICATING THE GROUNDWATER MEETS THE PRIMARY DRINKING WATER STANDARDS OF THE MAINE RULES RELATING TO DRINKING WATER FOR THOSE CATEGORIES TESTED.
3. PRIOR TO THE ISSUANCE OF A BUILDING PERMIT IN ANY APPROVED SUBDIVISION, THE SUBDIVIDER SHALL PROVIDE THE CODE ENFORCEMENT OFFICER WITH A LETTER FROM A REGISTERED LAND SURVEYOR STATING THAT ALL MONUMENTATION SHOWN ON THE PLAN FOR THE LOT RECEIVING THE BUILDING PERMIT AND FOR THE APPROVED SUBDIVISION PERIMETER BOUNDARIES OR PHASE THEREIN AS APPROVED BY THE PLANNING BOARD HAS BEEN INSTALLED.
4. NO CHANGES, ERASURES, MODIFICATIONS OR REVISIONS SHALL BE MADE IN ANY FINAL PLAN AFTER APPROVAL HAS BEEN GIVEN BY THE PLANNING BOARD AND ENDORSED IN WRITING ON THE PLAN, UNLESS THE REVISED FINAL PLAN IS FIRST SUBMITTED AND THE BOARD APPROVES ANY MODIFICATIONS, EXCEPT IN ACCORDANCE WITH § 260–10A(3).
5. THE APPROVAL BY THE BOARD OF A SUBDIVISION PLAN SHALL NOT BE DEEMED TO CONSTITUTE OR BE EVIDENCE OF ANY ACCEPTANCE BY THE MUNICIPALITY OF ANY STREET, EASEMENT OR OTHER AREA SHOWN ON SUCH PLAN.
6. FAILURE TO COMMENCE SUBSTANTIAL CONSTRUCTION OF THE SUBDIVISION WITHIN FIVE YEARS OF THE DATE OF APPROVAL AND SIGNING OF THE PLAN SHALL RENDER THE PLAN NULL AND VOID.

PROJECT PHASING

PHASE 1:
- LOTS 1–5, 13–17
- CAMERONS LANE STA 0+00 THRU CDS
- BRENDANS WAY STA 0+00–5+50
- PUMP STATION / SSWDS FIELD 1
- WETPOND 11 / DRY HYDRANTS

PHASE 2:
- LOTS 6–12, 18–20
- SSWDS FIELD 2

PHASE 2A:
- LOT 21
- SSWDS FIELD 3

PHASE 3:
- LOTS 22–29, 40
- BRENDANS WAY STA 5+50 THRU CDS
- WETPOND 40, DETENTION POND 55

PHASE 4:
- LOTS 30–39
- SSWDS FIELD 4

INDEX OF SHEETS

1.1 SUBDIVISION PLAN (COVER SHEET & NOTES)
1.2 SUBDIVISION PLAN
1.3 SUBDIVISION PLAN
1.4 SUBDIVISION PLAN
1.5 BOUNDARY SURVEY (REF. 1)
2.1 GRADING & UTILITY PLAN
2.2 GRADING & UTILITY PLAN
2.3 GRADING & UTILITY PLAN
2.4 GRADING & UTILITY PLAN
5.1 SITE DETAILS PLAN
5.2 SITE DETAILS PLAN
5.3 SITE DETAILS PLAN
5.4 SITE DETAILS PLAN
7.1 HIGH INTENSITY SOIL SURVEY

GENERAL NOTES (CON'T):

23. HOMEOWNERS' ASSOCIATION RESPONSIBLE FOR THE FOLLOWING:
A. ROAD MAINTENANCE AND REPAIR: PLOWING, PAVEMENT, ETC.
B. STORMWATER SYSTEM MAINTENANCE AND REPAIR: PONDS, SWALES, CULVERTS, INSPECTIONS, ETC.
C. SEWER SYSTEM OPERATION, MAINTENANCE AND REPAIR: SEPTIC TANK PUMPING, LEACH FIELDS, INSPECTIONS, ETC.
D. OPEN SPACE MANAGEMENT: BUFFERS INCLUDING FENCING, TRAILS, ETC.
E. FIRE POND MAINTENANCE AND REPAIR: HYDRANT ON CAMERONS LANE, POND VOLUME (DOES NOT INCLUDE HYDRANT ON WIRE ROAD)

24. THE COMMON LAND IS A TOTAL OF 79.94 ACRES (39.46 + 34.27 + .30 + 4.53 + 1.38) AND IS TO BE OWNED BY THE HOMEOWNER'S ASSOCIATION. A PORTION OF THE UNDEVELOPED OPEN SPACE MAY BE CONVEYED TO THE TOWN OF WELLS IN FEE OR PER A CONSERVATION EASEMENT IF ACCEPTED BY THE BOARD OF SELECTMEN. SUCH A CONVEYANCE SHALL NOT BE CONSIDERED AN AMENDMENT TO THE SUBDIVISION, BUT A PLAN DEPICTING THE CONVEYANCE MUST BE RECORDED IN THE YORK COUNTY REGISTRY OF DEEDS.

25. THE FIRE POND (WETPOND 11) TO BE COMPLETED AND APPROVED BY THE FIRE DEPARTMENT PRIOR TO THE ISSUANCE OF A PHASE 2 BUILDING PERMIT. APPROVAL REQUIREMENTS OF THE FIRE POND ARE AS FOLLOWS:
A. POND IS CONSTRUCTED AS PROPOSED AND WRITTEN CERTIFICATION BY A PE IS PROVIDED THAT IT MEETS ISO REQUIREMENTS (MIN. 30,000 AVAILABLE GALLONS);
B. HYDRANTS ARE TESTED AND APPROVED BY THE WELLS FIRE DEPARTMENT;
C. AN EASEMENT FOR USE OF THE FIRE POND IS CONVEYED TO THE TOWN OF WELLS;

HOMES ARE PERMITTED TO BE CONSTRUCTED WITH A RESIDENTIAL SPRINKLER SYSTEM.

26. ENCROACHMENTS OF PAVEMENT AND LAWN EXIST ALONG THE COMMON PROPERTY LINE WITH TAX MAP 68, LOT 2A. IF RESOLUTION BETWEEN THE PROPERTY OWNERS INCLUDES AN EASEMENT, THIS DOES NOT CONSTITUTE OR REQUIRE AN AMENDMENT TO THIS APPROVAL.

27. DRIVEWAYS AND CULVERTS ALONG BRENDANS WAY STA. 8+00 TO 20+00 TO BE INSTALLED BY THE DEVELOPER, MINIMUM 12 INCHES IN DIAMETER; 12" MINIMUM SOIL COVER OVER TOP OF PIPE.

WAIVERS GRANTED:
202–9B: PLAN SCALE; 202–12B(4): 24" TREES IN OPEN SPACE AREAS;

REFERENCES

1. "BOUNDARY SURVEY PLAN PREPARED FOR RTE 109, LLC – LAND LOCATED ON WIRE ROAD, WELLS, MAINE." PREPARED BY POST ROAD SURVEYING, WELLS, ME. PLAN DATED SEPTEMBER 12, 2007.

GRAPHIC SCALE
150 0 150 300 450 (FEET)

TOWN OF WELLS PLANNING BOARD	DATE

STATE OF MAINE
YORK COUNTY ss. REGISTRY OF DEEDS
RECEIVED_____, 20___
AT___h,___m,___M, AND RECORDED IN
PLAN BOOK_____, PAGE_____
ATTEST_____REGISTER

NO.	DESCRIPTION	DATE
E.	ISSUED FOR PB APPROVAL.	8/19/16
D.	TOWN OF WELLS FINAL PLAN SUBMITTAL.	5/23/16
C.	MDEP REVIEW REVISIONS.	5/13/16
B.	TOWN REVIEW REVISIONS.	3/16/16
A.	MDEP SUBMITTAL.	3/8/16

REVISIONS

OWNER / APPLICANT:
HIGHPINE PROPERTIES, LLC.
P.O. BOX 339
WELLS, ME 04090

CLUSTER SUBDIVISION PLAN
WIRE ROAD SUBDIVISION
WIRE ROAD, WELLS, ME

FOR: HIGHPINE PROPERTIES, LLC.
P.O. BOX 339
WELLS, ME 04090

ATTAR ENGINEERING, INC.
CIVIL ◆ STRUCTURAL ◆ MARINE
1284 STATE ROAD – ELIOT, MAINE 03903
PHONE: (207)439–6023 FAX: (207)439–2128

SCALE: 1" = 150'	APPROVED BY:	DRAWN BY: STB
DATE: 1/11/16		REVISION : DATE E : 8/19/16
JOB NO: C141–16	CAD FILE: FENDERSON MASTER	SHEET 1.1

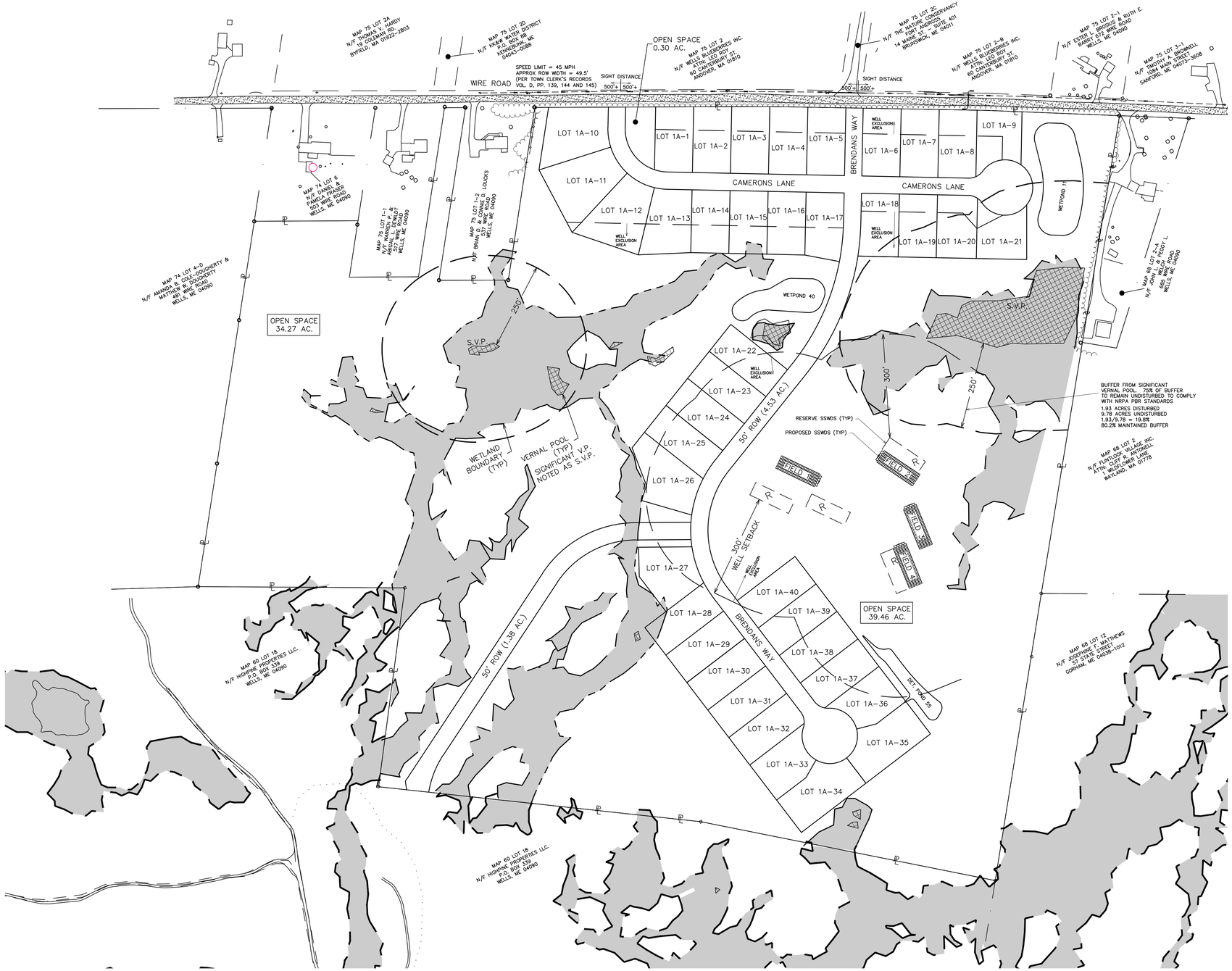

LEGEND

EXISTING CONTOUR	XXX
FINAL CONTOUR	XXX
WETLAND BOUNDARY	UPLAND / WETLAND
UTILITY POLE	EXT. / PRP.
EXT. WATER	EW
EXT. SEWER	ES
EXT. OVERHEAD UTIL.	EOHU
EXT. UNDERGROUND UTIL.	EUU
PRP. WATER	PW
PRP. SEWER	PS
PRP. FORCE MAIN	FM
PRP. UTILITY	P UG/OHU
WATER VALVE	EXT. / PRP. WV
WATER SHUTOFF	
SEWER MANHOLE	S
LIGHT POLE	EXT. / PRP.
SILTATION FENCE	
PROPOSED FENCE	
EXISTING FENCE	
ASPHALT CURB	
EXISTING CURB	
PROPOSED GUARDRAIL	
BOLLARD	
FIRE HYDRANT	EXT. / PRP.
DRAINAGE EASEMENT	
DIRECTION OF DRAINAGE	
TREELINE	
TEST PIT	(SUITABLE) / (UNSUITABLE)

DRILL HOLE OR REBAR WITH CAP TO BE SET	
STONE OR CONCRETE MONUMENT OR DRILL HOLE TO BE SET	
FOUND IRON PIPE/ROD	FIP/FIR
FOUND DRILL HOLE	FDH
FOUND CONCRETE/GRANITE BOUND	FCB/FGB

TOWN OF WELLS PLANNING BOARD	DATE

STATE OF MAINE
YORK COUNTY ss. REGISTRY OF DEEDS
RECEIVED_____, 20__
AT___h,___m,___M, AND RECORDED IN
PLAN BOOK_____, PAGE_____
ATTEST_____REGISTER

GRAPHIC SCALE
150 0 150 300 450 (FEET)

NO.	DESCRIPTION	DATE
E.	ISSUED FOR PB APPROVAL.	8/19/16
D.	TOWN OF WELLS FINAL PLAN SUBMITTAL.	5/23/16
C.	MDEP REVIEW REVISIONS.	5/13/16
B.	TOWN REVIEW REVISIONS.	3/16/16
A.	MDEP SUBMITTAL.	3/8/16

REVISIONS

OWNER / APPLICANT:
HIGHPINE PROPERTIES, LLC.
P.O. BOX 339
WELLS, ME 04090

CLUSTER SUBDIVISION PLAN
WIRE ROAD SUBDIVISION
WIRE ROAD, WELLS, ME

FOR: HIGHPINE PROPERTIES, LLC.
P.O. BOX 339
WELLS, ME 04090

ATTAR ENGINEERING, INC.
CIVIL ◆ STRUCTURAL ◆ MARINE
1284 STATE ROAD – ELIOT, MAINE 03903
PHONE: (207)439-6023 FAX: (207)439-2128

SCALE: 1" = 150'	APPROVED BY:	DRAWN BY: STB
DATE: 1/11/16		REVISION : DATE E : 8/19/16
JOB NO: C141-16	CAD FILE: FENDERSON MASTER	SHEET 1.2

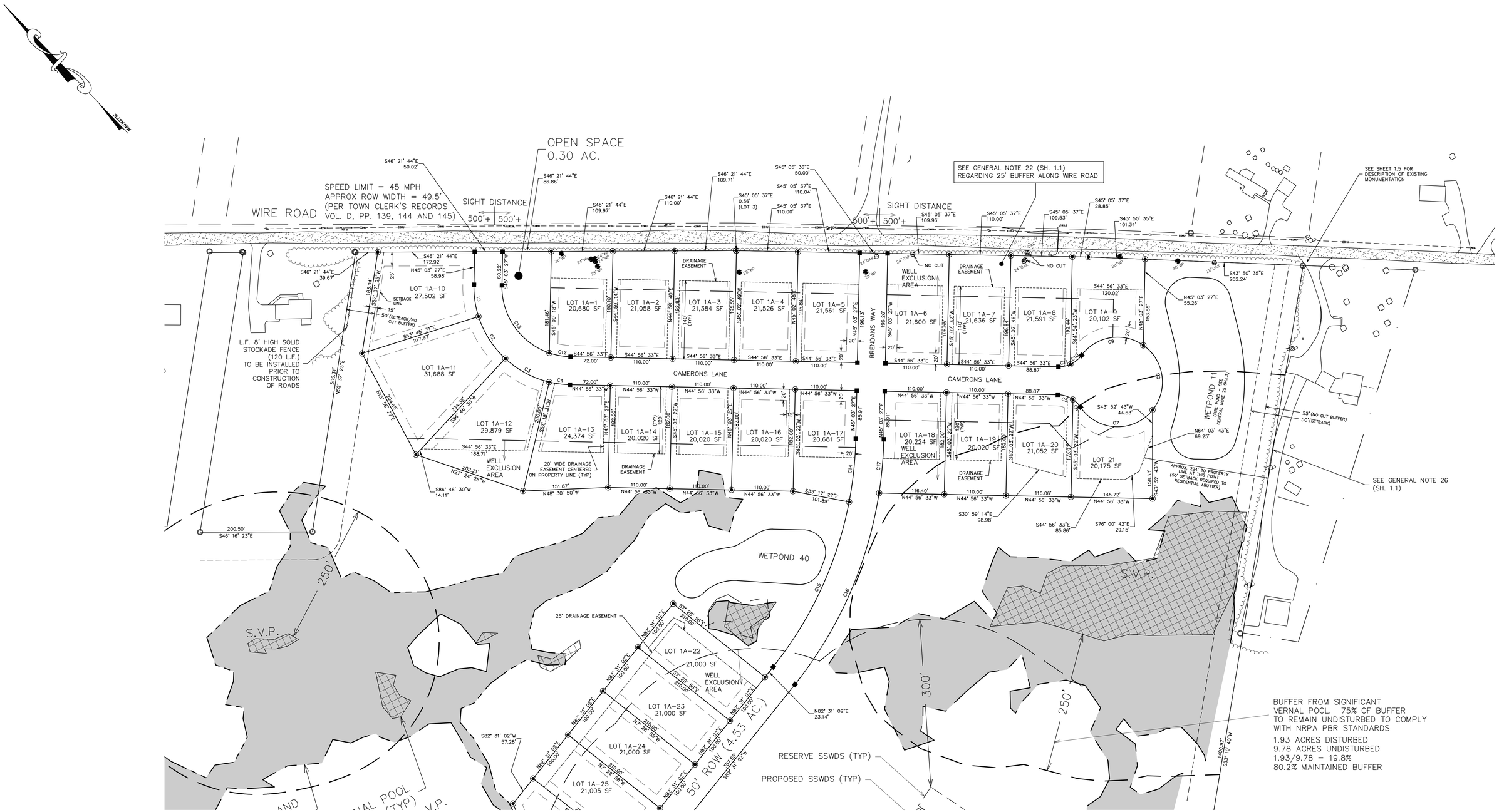

Curve Table				
Curve #	Length	Radius	CHD. DIST.	CHD. DIR.
C1	57.47	175.00	57.21	S35° 38' 58"W
C2	90.00	175.00	89.01	S11° 30' 30"W
C3	90.00	175.00	89.01	S17° 57' 29"E
C4	37.42	175.00	37.35	S38° 49' 01"E
C5	28.74	50.00	28.35	N28° 28' 33"W
C6	19.05	50.00	18.94	N1° 05' 35"W
C7	149.77	80.00	128.84	S43° 48' 30"E
C8	130.71	80.00	116.65	N35° 45' 15"E
C9	123.79	80.00	111.80	N55° 22' 47"W
C10	25.98	50.00	25.69	S84° 49' 20"E
C11	21.81	50.00	21.64	S57° 26' 22"E
C12	38.61	125.00	38.46	S36° 05' 37"E
C13	157.74	125.00	147.48	S8° 54' 23"W

Curve Table				
Curve #	Length	Radius	CHD. DIST.	CHD. DIR.
C14	113.71	675.00	113.57	N49° 53' 00"E
C15	327.60	675.00	324.40	N68° 36' 47"E
C16	377.63	725.00	373.38	N67° 35' 43"E
C17	96.37	725.00	96.30	N48° 51' 56"E

TOWN OF WELLS
PLANNING BOARD DATE

STATE OF MAINE
YORK COUNTY ss. REGISTRY OF DEEDS
RECEIVED_____, 20___
AT___h,___m,___M, AND RECORDED IN
PLAN BOOK_____, PAGE_____
ATTEST_____REGISTER

GRAPHIC SCALE
80 0 80 160 240 (FEET)

OWNER / APPLICANT:
HIGHPINE PROPERTIES, LLC.
P.O. BOX 339
WELLS, ME 04090

NO.	DESCRIPTION	DATE
E.	ISSUED FOR PB APPROVAL.	8/19/16
D.	TOWN OF WELLS FINAL PLAN SUBMITTAL.	5/23/16
C.	MDEP REVIEW REVISIONS.	5/13/16
B.	TOWN REVIEW REVISIONS.	3/16/16
A.	MDEP SUBMITTAL.	3/8/16

REVISIONS

CLUSTER SUBDIVISION PLAN
WIRE ROAD SUBDIVISION
WIRE ROAD, WELLS, ME

FOR: HIGHPINE PROPERTIES, LLC.
P.O. BOX 339
WELLS, ME 04090

ATTAR ENGINEERING, INC.
CIVIL ◆ STRUCTURAL ◆ MARINE
1284 STATE ROAD – ELIOT, MAINE 03903
PHONE: (207)439-6023 FAX: (207)439-2128

SCALE: 1" = 80'	APPROVED BY:	DRAWN BY: STB
DATE: 1/11/16		REVISION : DATE E : 8/19/16
JOB NO: C141-16	CAD FILE: FENDERSON MASTER	SHEET 1.3

BUFFER FROM SIGNIFICANT VERNAL POOL. 75% OF BUFFER TO REMAIN UNDISTURBED TO COMPLY WITH NRPA PBR STANDARDS

1.93 ACRES DISTURBED
9.78 ACRES UNDISTURBED
1.93/9.78 = 19.8%
80.2% MAINTAINED BUFFER

Curve Table				
Curve #	Length	Radius	CHD. DIST.	CHD. DIR.
C18	64.72	325.00	64.61	S76° 48' 43"W
C19	110.63	325.00	110.10	S61° 21' 18"W
C20	21.21	325.00	21.21	S49° 43' 59"W
C21	50.05	325.00	50.00	S43° 27' 05"W
C22	21.13	325.00	21.13	S37° 10' 37"W
C23	109.66	325.00	109.14	S25° 38' 54"W
C24	53.73	325.00	53.67	S11° 14' 44"W
C25	35.34	50.00	34.61	N26° 45' 25"E
C26	12.45	50.00	12.42	N54° 08' 23"E
C27	108.40	80.00	100.29	S22° 27' 29"W
C28	93.74	80.00	88.46	S49° 55' 29"E
C29	93.74	80.00	88.46	N62° 56' 33"E
C30	108.40	80.00	100.29	N9° 26' 25"W
C31	12.45	50.00	12.42	S41° 07' 19"E
C32	35.34	50.00	34.61	S13° 44' 21"E
C33	364.81	275.00	338.65	S44° 30' 47"W
C34	318.52	325.00	305.92	N74° 37' 30"W
C35	269.51	275.00	258.86	N74° 37' 30"W
C36	115.99	275.00	115.14	S65° 12' 54"W

TOWN OF WELLS
PLANNING BOARD DATE

STATE OF MAINE
YORK COUNTY ss. REGISTRY OF DEEDS
RECEIVED_____, 20__
AT___h,___m,___M, AND RECORDED IN
PLAN BOOK_____, PAGE_____
ATTEST_____REGISTER

GRAPHIC SCALE
80 0 80 160 240 (FEET)

NO.	DESCRIPTION	DATE
D.	ISSUED FOR PB APPROVAL.	8/19/16
C.	TOWN OF WELLS FINAL PLAN SUBMITTAL.	5/23/16
B.	MDEP REVIEW REVISIONS.	5/13/16
A.	MDEP SUBMITTAL.	3/8/16

REVISIONS

OWNER / APPLICANT:
HIGHPINE PROPERTIES, LLC.
P.O. BOX 339
WELLS, ME 04090

CLUSTER SUBDIVISION PLAN
WIRE ROAD SUBDIVISION
WIRE ROAD, WELLS, ME

FOR: HIGHPINE PROPERTIES, LLC.
P.O. BOX 339
WELLS, ME 04090

ATTAR ENGINEERING, INC.
CIVIL ◆ STRUCTURAL ◆ MARINE
1284 STATE ROAD – ELIOT, MAINE 03903
PHONE: (207)439-6023 FAX: (207)439-2128

SCALE: 1" = 80'	APPROVED BY:	DRAWN BY: STB
DATE: 1/11/16		REVISION : DATE D : 8/19/16
JOB NO: C141-16	CAD FILE: FENDERSON MASTER	SHEET 1.4

LINE TABLE		
LINE	LENGTH	BEARING
L1	60.73	S46°16'23"E

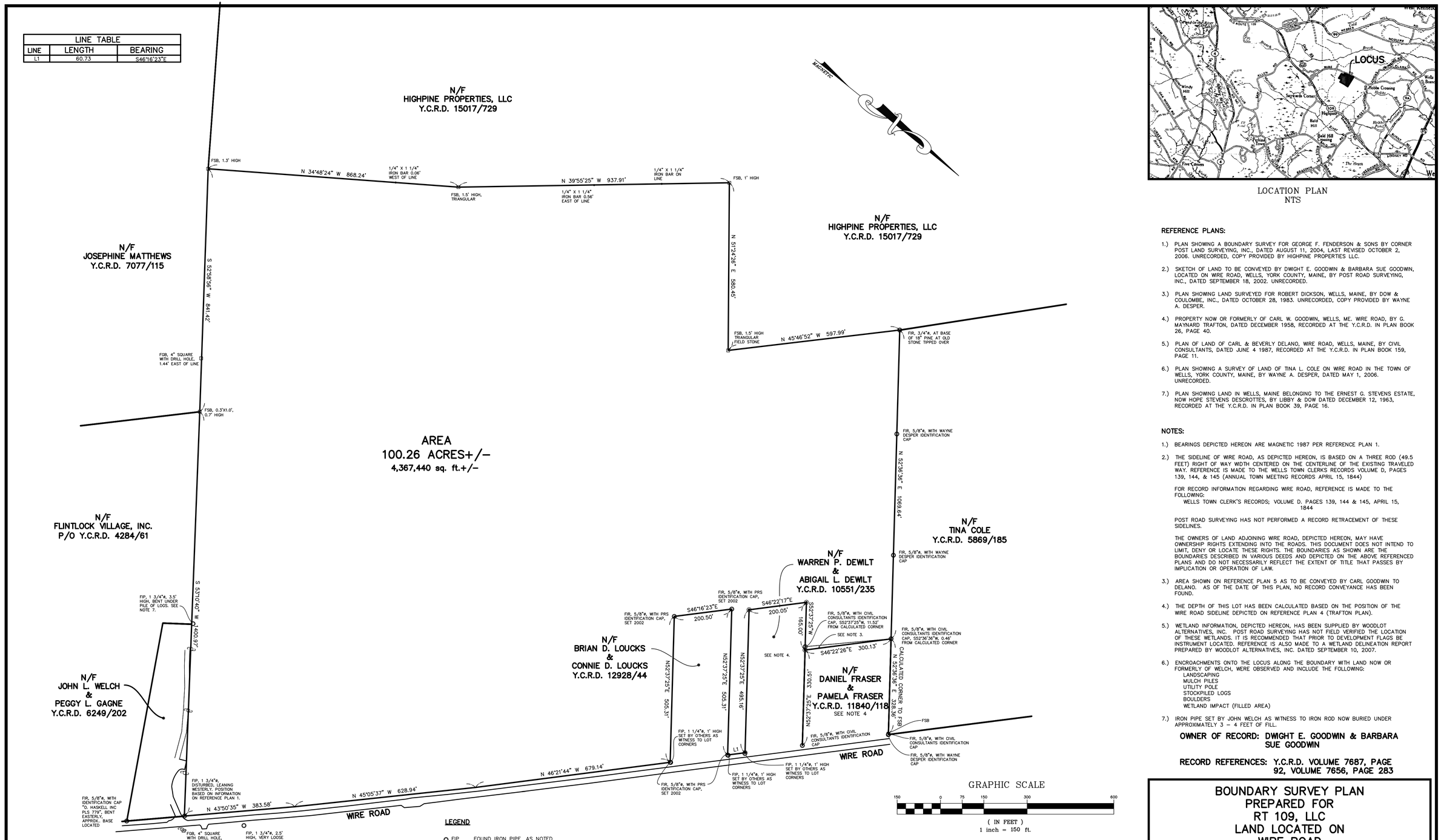

LOCATION PLAN
NTS

REFERENCE PLANS:

1.) PLAN SHOWING A BOUNDARY SURVEY FOR GEORGE F. FENDERSON & SONS BY CORNER POST LAND SURVEYING, INC., DATED AUGUST 11, 2004, LAST REVISED OCTOBER 2, 2006. UNRECORDED, COPY PROVIDED BY HIGHPINE PROPERTIES LLC.

2.) SKETCH OF LAND TO BE CONVEYED BY DWIGHT E. GOODWIN & BARBARA SUE GOODWIN, LOCATED ON WIRE ROAD, WELLS, YORK COUNTY, MAINE, BY POST ROAD SURVEYING, INC., DATED SEPTEMBER 18, 2002. UNRECORDED.

3.) PLAN SHOWING LAND SURVEYED FOR ROBERT DICKSON, WELLS, MAINE, BY DOW & COULOMBE, INC., DATED OCTOBER 28, 1983. UNRECORDED, COPY PROVIDED BY WAYNE A. DESPER.

4.) PROPERTY NOW OR FORMERLY OF CARL W. GOODWIN, WELLS, ME. WIRE ROAD, BY G. MAYNARD TRAFTON, DATED DECEMBER 1958, RECORDED AT THE Y.C.R.D. IN PLAN BOOK 26, PAGE 40.

5.) PLAN OF LAND OF CARL & BEVERLY DELANO, WIRE ROAD, WELLS, MAINE, BY CIVIL CONSULTANTS, DATED JUNE 4 1987, RECORDED AT THE Y.C.R.D. IN PLAN BOOK 159, PAGE 11.

6.) PLAN SHOWING A SURVEY OF LAND OF TINA L. COLE ON WIRE ROAD IN THE TOWN OF WELLS, YORK COUNTY, MAINE, BY WAYNE A. DESPER, DATED MAY 1, 2006. UNRECORDED.

7.) PLAN SHOWING LAND IN WELLS, MAINE BELONGING TO THE ERNEST G. STEVENS ESTATE, NOW HOPE STEVENS DESCROTTES, BY LIBBY & DOW DATED DECEMBER 12, 1963, RECORDED AT THE Y.C.R.D. IN PLAN BOOK 39, PAGE 16.

NOTES:

1.) BEARINGS DEPICTED HEREON ARE MAGNETIC 1987 PER REFERENCE PLAN 1.

2.) THE SIDELINE OF WIRE ROAD, AS DEPICTED HEREON, IS BASED ON A THREE ROD (49.5 FEET) RIGHT OF WAY WIDTH CENTERED ON THE CENTERLINE OF THE EXISTING TRAVELED WAY. REFERENCE IS MADE TO THE WELLS TOWN CLERKS RECORDS VOLUME D, PAGES 139, 144, & 145 (ANNUAL TOWN MEETING RECORDS APRIL 15, 1844)

FOR RECORD INFORMATION REGARDING WIRE ROAD, REFERENCE IS MADE TO THE FOLLOWING:
WELLS TOWN CLERK'S RECORDS; VOLUME D. PAGES 139, 144 & 145, APRIL 15, 1844

POST ROAD SURVEYING HAS NOT PERFORMED A RECORD RETRACEMENT OF THESE SIDELINES.

THE OWNERS OF LAND ADJOINING WIRE ROAD, DEPICTED HEREON, MAY HAVE OWNERSHIP RIGHTS EXTENDING INTO THE ROADS. THIS DOCUMENT DOES NOT INTEND TO LIMIT, DENY OR LOCATE THESE RIGHTS. THE BOUNDARIES AS SHOWN ARE THE BOUNDARIES DESCRIBED IN VARIOUS DEEDS AND DEPICTED ON THE ABOVE REFERENCED PLANS AND DO NOT NECESSARILY REFLECT THE EXTENT OF TITLE THAT PASSES BY IMPLICATION OR OPERATION OF LAW.

3.) AREA SHOWN ON REFERENCE PLAN 5 AS TO BE CONVEYED BY CARL GOODWIN TO DELANO. AS OF THE DATE OF THIS PLAN, NO RECORD CONVEYANCE HAS BEEN FOUND.

4.) THE DEPTH OF THIS LOT HAS BEEN CALCULATED BASED ON THE POSITION OF THE WIRE ROAD SIDELINE DEPICTED ON REFERENCE PLAN 4 (TRAFTON PLAN).

5.) WETLAND INFORMATION, DEPICTED HEREON, HAS BEEN SUPPLIED BY WOODLOT ALTERNATIVES, INC. POST ROAD SURVEYING HAS NOT FIELD VERIFIED THE LOCATION OF THESE WETLANDS. IT IS RECOMMENDED THAT PRIOR TO DEVELOPMENT FLAGS BE INSTRUMENT LOCATED. REFERENCE IS ALSO MADE TO A WETLAND DELINEATION REPORT PREPARED BY WOODLOT ALTERNATIVES, INC. DATED SEPTEMBER 10, 2007.

6.) ENCROACHMENTS ONTO THE LOCUS ALONG THE BOUNDARY WITH LAND NOW OR FORMERLY OF WELCH, WERE OBSERVED AND INCLUDE THE FOLLOWING:
- LANDSCAPING
- MULCH PILES
- UTILITY POLE
- STOCKPILED LOGS
- BOULDERS
- WETLAND IMPACT (FILLED AREA)

7.) IRON PIPE SET BY JOHN WELCH AS WITNESS TO IRON ROD NOW BURIED UNDER APPROXIMATELY 3 – 4 FEET OF FILL.

OWNER OF RECORD: DWIGHT E. GOODWIN & BARBARA SUE GOODWIN

RECORD REFERENCES: Y.C.R.D. VOLUME 7687, PAGE 92, VOLUME 7656, PAGE 283

LEGEND

FIP	FOUND IRON PIPE, AS NOTED
FIR	FOUND IRON ROD, AS NOTED
FGB	FOUND GRANITE BOUND, AS NOTED
FSB	FOUND FIELD STONE BOUND
	UTILITY POLE
N/F	LAND, NOW OR FORMERLY, OF
Y.C.R.D.	YORK COUNTY REGISTRY OF DEEDS
7654/321	VOLUME OF RECORDED DOCUMENT/PAGE OF RECORDED DOCUMENT
◉	IRON ROD, 5/8 INCH ø, WITH IDENTIFICATION CAP SCRIBED ME PLS 1311 NH LLS 749 (TO BE SET)

STATE OF MAINE
YORK COUNTY ss. REGISTRY OF DEEDS
RECEIVED_____, 20__
AT___h,___m,___M, AND RECORDED IN
PLAN BOOK_____, PAGE_____

ATTEST_____REGISTER

REVISED 8/19/2016: ISSUED FOR PLANNING BOARD APPROVAL, (REVISED SHEET NUMBER)

STATE OF MAINE
JAMES S. WRIGHT JR.
No 1311
PROFESSIONAL
LAND SURVEYOR

Post Road Surveying
Wells, Maine 04090
P.O. Box 1557
Tel. 207-646-4246
FAX 207-646-4242

DRAWN: J. WRIGHT	SCALE: 1" = 150'	DATE: 9/12/2007
CALC. J. WRIGHT	APPROVED	
N.B.# SEE FILE	SHEET 1.5	PROJ: 0712701 GOODWIN.DWG

BOUNDARY SURVEY PLAN PREPARED FOR RT 109, LLC LAND LOCATED ON WIRE ROAD WELLS ~ MAINE

RECORD OWNER: DWIGHT E. GOODWIN & BARBARA SUE GOODWIN

MAILING ADDRESSES: DWIGHT E. & BARBARA SUE GOODWIN, PO BOX 701286 ST CLOUD, FL 34770

HIGH PINE PROPERTIES, LLC, P.O. BOX 339, WELLS, ME 04090

JOB #2007-127.01

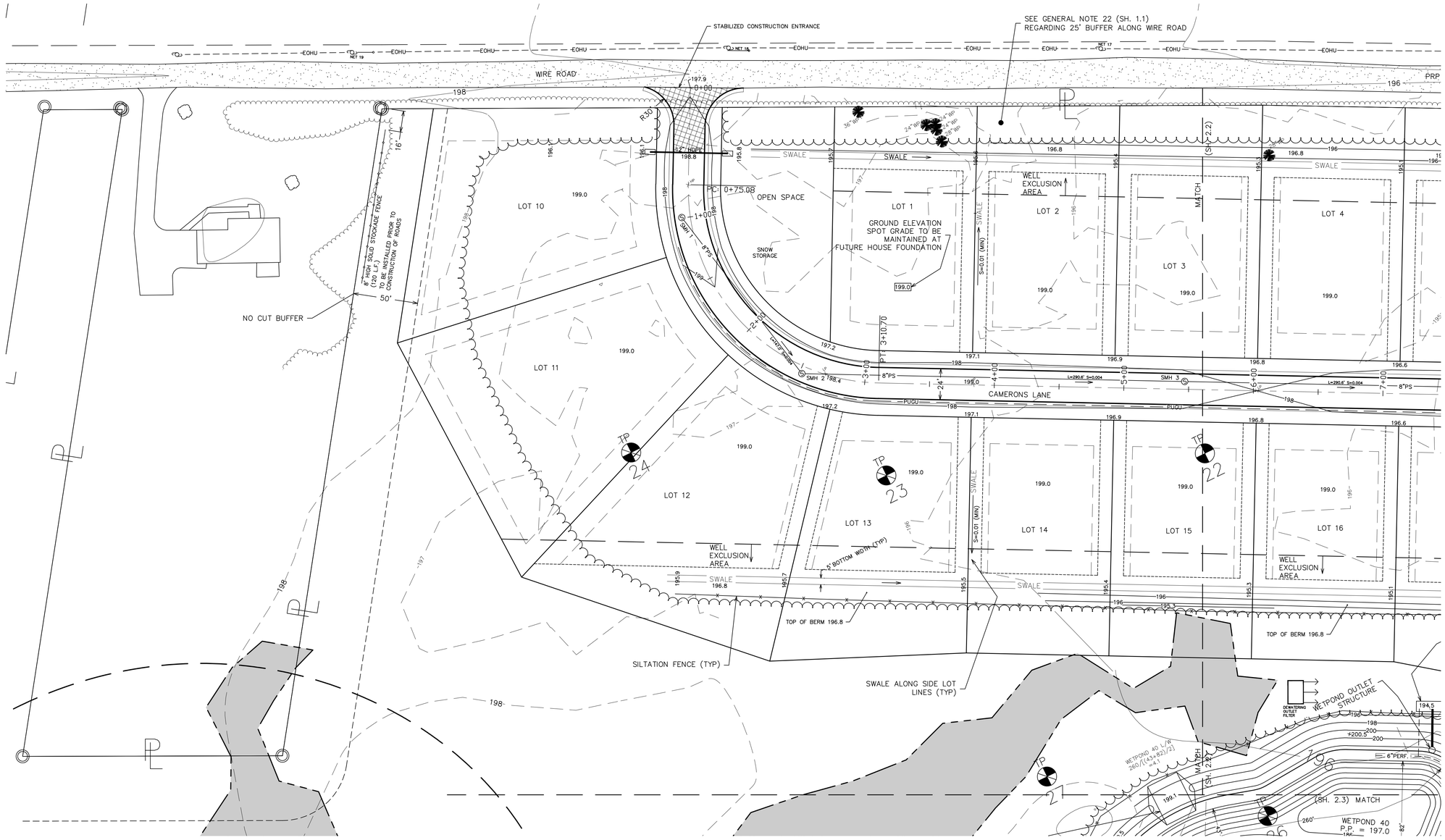

LEGEND

EXISTING CONTOUR	XXX
FINAL CONTOUR	XXX
WETLAND BOUNDARY	UPLAND / WETLAND
UTILITY POLE	EXT. / PRP.
EXT. WATER	EW
EXT. SEWER	ES
EXT. OVERHEAD UTIL.	EOHU
EXT. UNDERGROUND UTIL.	EUU
PRP. WATER	PW
PRP. SEWER	PS
PRP. FORCE MAIN	FM
PRP. UTILITY	P UG/OHU
WATER VALVE	EXT. / PRP. WV
WATER SHUTOFF	
SEWER MANHOLE	S
LIGHT POLE	EXT. / PRP.
SILTATION FENCE	
PROPOSED FENCE	
EXISTING FENCE	
ASPHALT CURB	
EXISTING CURB	
PROPOSED GUARDRAIL	
BOLLARD	
FIRE HYDRANT	EXT. / PRP.
DRAINAGE EASEMENT	
DIRECTION OF DRAINAGE	
TREELINE	
TEST PIT	(SUITABLE) / (UNSUITABLE)

SEWER SCHEDULE

SMH 1 RIM = INV OUT 194.06	SMH 2 RIM = INV IN = 193.47 INV OUT = 193.37
SMH 3 RIM= INV IN = 192.31 INV OUT= 192.21	SMH 4 RIM= INV IN(2)=191.15 INV OUT=191.05
SMH 5 RIM= INV IN=194.68 INV IN=189.96 INV OUT=189.86	PUMP STATION RIM=200.0 INV IN=189.0 INV OUT(FM)=192.0
SMH 6 RIM= INV OUT=192.81	SMH 7 RIM= INV IN=192.03 INV OUT=191.93
SMH 8 RIM= INV OUT= 209.19	SMH 9 RIM= INV IN=207.99 INV OUT=207.89
SMH 10 RIM= INV IN = 206.79 INV OUT= 206.69	SMH 11 RIM= INV IN=203.47 INV OUT=203.37
SMH 12 RIM= INV IN = 200.23 NV OUT= 200.13	SMH 13 RIM= INV IN=196.88 INV OUT=196.78
SMH 14 RIM= INV IN = 195.83 INV OUT= 195.73	

GENERAL NOTES

1. EXISTING TOPOGRAPHY IN DEVELOPMENT AREA WAS MAPPED BY ATTAR ENGINEERING, INC. IN SUMMER AND FALL OF 2016. EXISTING TOPOGRAPHY OUTSIDE DEVELOPMENT AREA WAS TAKEN FROM AN AERIAL SURVEY BY OTHERS.

2. ALL SEWER LINES TO BE 8" PVC (SDR 35). ALL OTHER ASPECTS OF THE SEWER SYSTEM INCLUDING MANHOLES AND CONSTRUCTION METHODS SHALL MEET CURRENT WELLS SANITARY DISTRICT STANDARDS.

3. ALL STORM DRAINS SHALL BE ADS N-12 (HDPE) OR APPROVED EQUAL.

4. PROPOSED UNDERGROUND UTILITIES ARE APPROXIMATELY LOCATED. CENTRAL MAINE POWER WILL PREPARE FINAL ELECTRICAL PLAN FOR CONSTRUCTION. SEE GENERAL NOTE 11 (SH. 1.1) REGARDING PLACEMENT OF TRANSFORMERS.

5. SEE GENERAL NOTE 27 (SH. 1.1) REGARDING DRIVEWAY/DRIVEWAY CULVERT INSTALLATION.

GRAPHIC SCALE

40 0 40 80 120 (FEET)

NO.	DESCRIPTION	DATE
E.	GENERAL REVISIONS.	8/19/16
D.	TOWN OF WELLS FINAL PLAN SUBMITTAL.	5/23/16
C.	MDEP REVIEW REVISIONS.	5/13/16
B.	TOWN REVIEW REVISIONS.	3/16/16
A.	MDEP SUBMITTAL.	3/8/16

REVISIONS

GRADING AND UTILITY PLAN
WIRE ROAD SUBDIVISION
WIRE ROAD, WELLS, ME

FOR: HIGHPINE PROPERTIES, LLC.
P.O. BOX 339
WELLS, ME 04090

ATTAR ENGINEERING, INC.
CIVIL ◆ STRUCTURAL ◆ MARINE
1284 STATE ROAD – ELIOT, MAINE 03903
PHONE: (207)439-6023 FAX: (207)439-2128

SCALE: 1" = 40'	APPROVED BY:	DRAWN BY: STB
DATE: 1/11/16		REVISION : DATE E : 8/19/16
JOB NO: C141-16	CAD FILE: FENDERSON MASTER	SHEET 2.1

(SH. 1.1)
ALONG WIRE ROAD

STABILIZED CONSTRUCTION ENTRANCE
EXT. 12' CMP

SEE GENERAL NOTE 22 (SH. 1.1)
REGARDING 25' BUFFER ALONG WIRE ROAD

EXT. 15' CMP
(APPROX. INVERTS)

DRY HYDRANT TO BE PLACED
IN WIRE ROAD ROW, TO BE INSTALLED BY THE
DEVELOPER. FINAL LOCATION
TO BE APPROVED BY THE WELLS FIRE CHIEF.
TO BE MAINTAINED BY TOWN OF WELLS.

WIRE ROAD
PRP POLE
NO CUT
SWALE
WELL EXCLUSION
LOT 3
LOT 4
LOT 5
LOT 6
LOT 7
LOT 8
LOT 9
LOT 15
LOT 16
LOT 17
LOT 18
LOT 19
LOT 20
LOT 21
(SH. 2.1) MATCH
BRENDANS WAY
CAMERONS LANE
PI: 8+47.70
PRC: 15+18.57
PRC: 12+55.56
PC: 3+45.43
EP: 15+90.39
PC: 11+83.64
SNOW STORAGE
DRY HYDRANT
HDPE POND LINER
FIRE POND WETPOND 11 P.P. = 194.0
25' EMERGENCY SPILLWAY
WETPOND 11 L/W 305/100=3.0
TOP OF BERM 197.0
POND INLET FOREBAY BERM
25'(NO CUT BUFFER)
TOP OF BERM 196.8
25' LEVEL SPREADER
WETPOND OUTLET STRUCTURE
DEWATERING OUTLET FILTER
CULVERT INLET/OUTLET PROTECTION (TYP)
5' WIDE X 2' HIGH X 50' LONG CONCRETE BOX CULVERT
10' WIDE GRAVEL TURNOUT
SILTATION FENCE
GRAVEL TRENCH W/ 6" PERF U.D. L=85'
GRAVEL TRENCH W/ 6" PERF U.D. L=55'
WETPOND 40 L/W 265/[(434-82)/2] 4.1
(SH. 2.3) MATCH
WETPOND 40 P.P. = 197.0
SIGNIFICANT VERNAL POOL
BERM

GRAPHIC SCALE
40 0 40 80 120 (FEET)

NO.	DESCRIPTION	DATE
E.	GENERAL REVISIONS.	8/19/16
D.	TOWN OF WELLS FINAL PLAN SUBMITTAL.	5/23/16
C.	MDEP REVIEW REVISIONS.	5/13/16
B.	TOWN REVIEW REVISIONS.	3/16/16
A.	MDEP SUBMITTAL.	3/8/16

REVISIONS

GRADING AND UTILITY PLAN
WIRE ROAD SUBDIVISION
WIRE ROAD, WELLS, ME

FOR: HIGHPINE PROPERTIES, LLC.
P.O. BOX 339
WELLS, ME 04090

ATTAR ENGINEERING, INC.
CIVIL ◆ STRUCTURAL ◆ MARINE
1284 STATE ROAD – ELIOT, MAINE 03903
PHONE: (207)439-6023 FAX: (207)439-2128

SCALE: 1" = 40'	APPROVED BY:	DRAWN BY: STB
DATE: 1/11/16		REVISION : DATE E : 8/19/16
JOB NO: C141-16	CAD FILE: FENDERSON MASTER	SHEET 2.2

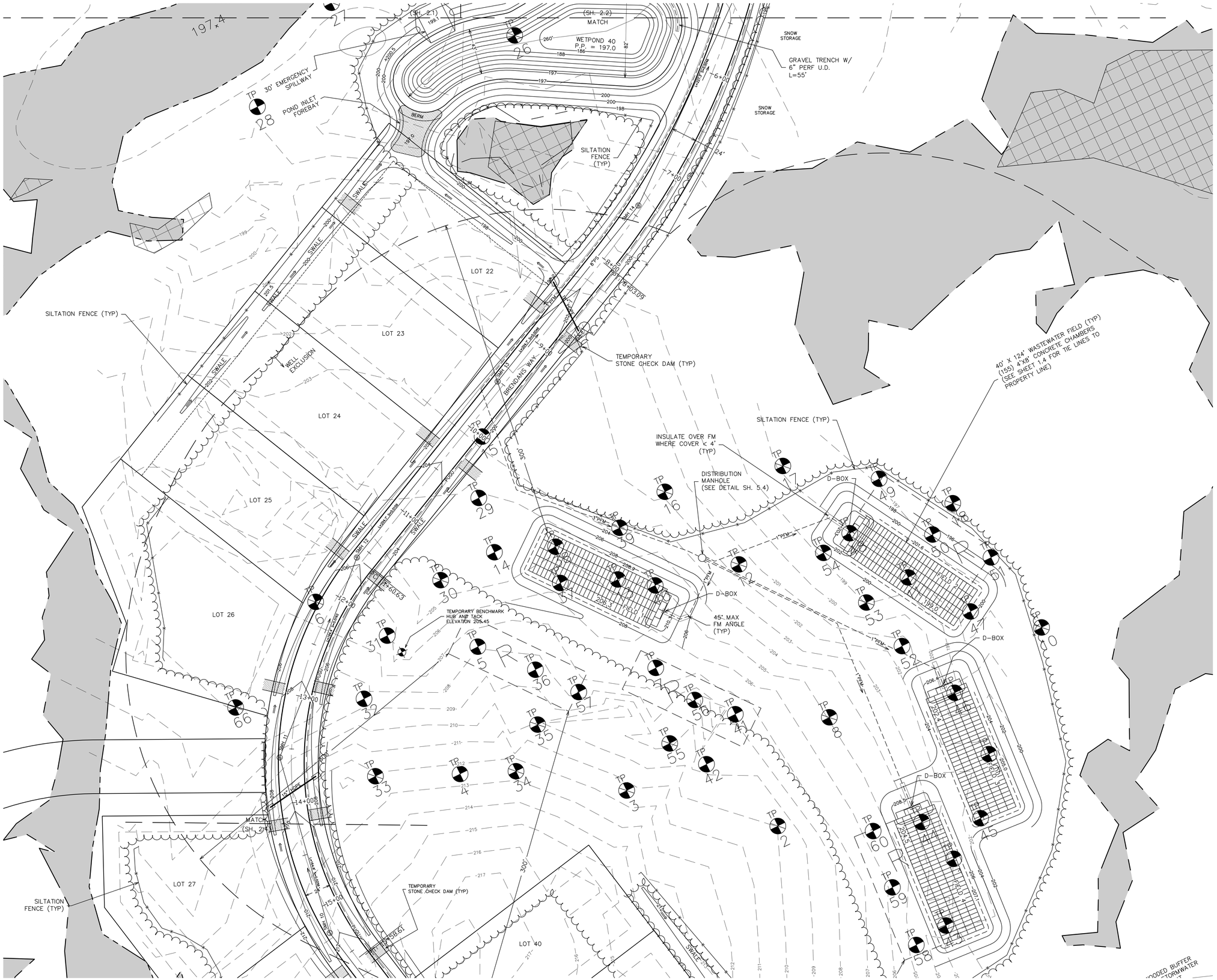

DRIVEWAY CULVERTS TO BE INSTALLED BY DEVELOPER. (SEE GENERAL NOTE 27, SHEET 1.1).

GRAPHIC SCALE

40 0 40 80 120 (FEET)

NO.	DESCRIPTION	DATE
E.	GENERAL REVISIONS.	8/19/16
D.	MDEP REVIEW – ADDED TBM.	6/1/16
C.	TOWN OF WELLS FINAL PLAN SUBMITTAL.	5/23/16
B.	MDEP REVIEW REVISIONS.	5/13/16
A.	MDEP SUBMITTAL.	3/8/16

REVISIONS

GRADING AND UTILITY PLAN
WIRE ROAD SUBDIVISION
WIRE ROAD, WELLS, ME

FOR: HIGHPINE PROPERTIES, LLC.
P.O. BOX 339
WELLS, ME 04090

ATTAR ENGINEERING, INC.
CIVIL ◆ STRUCTURAL ◆ MARINE
1284 STATE ROAD – ELIOT, MAINE 03903
PHONE: (207)439-6023 FAX: (207)439-2128

SCALE: 1" = 40'	APPROVED BY:	DRAWN BY: STB
DATE: 1/11/16		REVISION : DATE E : 8/19/16
JOB NO: C141-16	CAD FILE: FENDERSON MASTER	SHEET 2.3

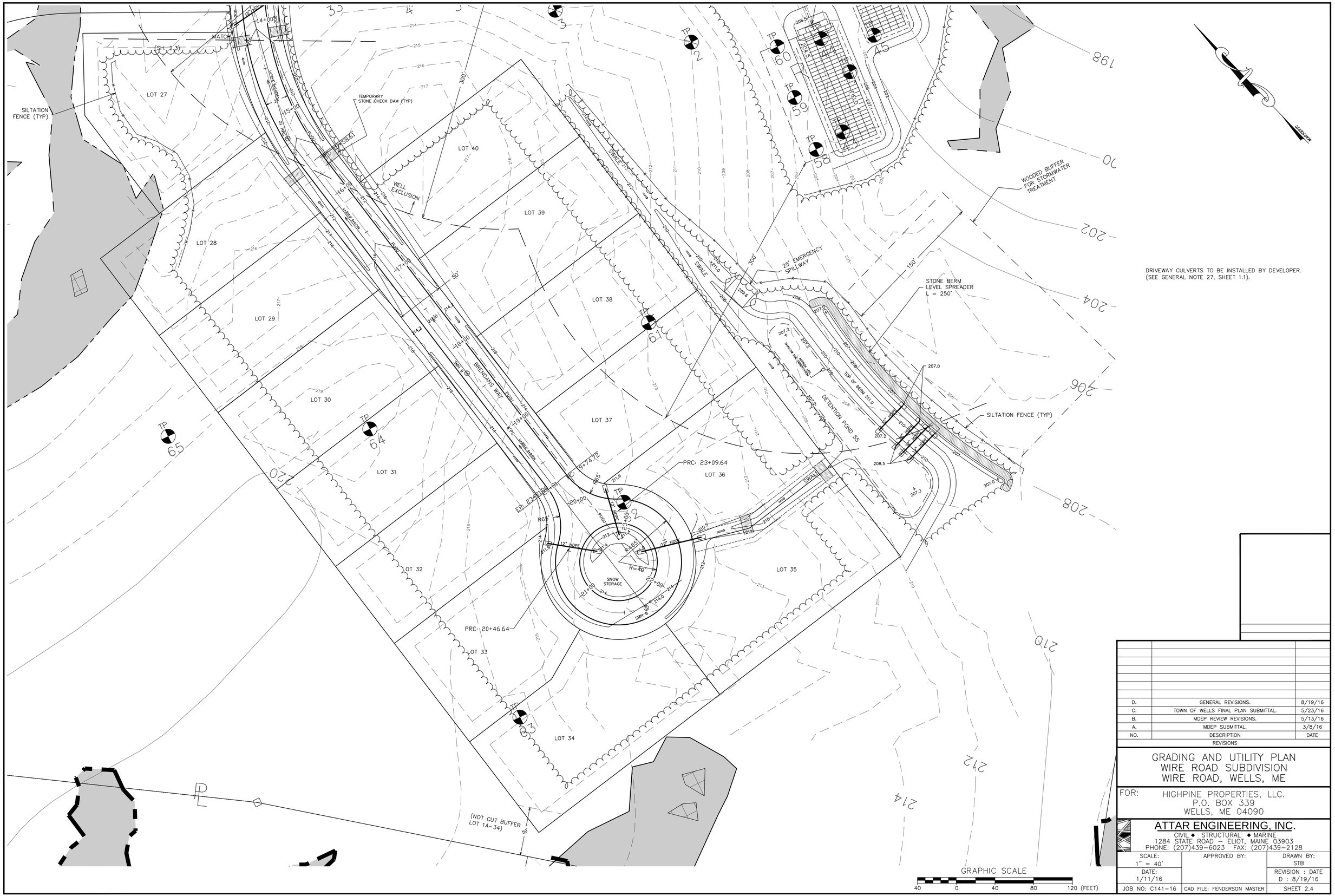

NO.	DESCRIPTION	DATE
D.	GENERAL REVISIONS.	8/19/16
C.	TOWN OF WELLS FINAL PLAN SUBMITTAL.	5/23/16
B.	MDEP REVIEW REVISIONS.	5/13/16
A.	MDEP SUBMITTAL.	3/8/16

REVISIONS

GRADING AND UTILITY PLAN
WIRE ROAD SUBDIVISION
WIRE ROAD, WELLS, ME

FOR: HIGHPINE PROPERTIES, LLC.
P.O. BOX 339
WELLS, ME 04090

ATTAR ENGINEERING, INC.
CIVIL ◆ STRUCTURAL ◆ MARINE
1284 STATE ROAD – ELIOT, MAINE 03903
PHONE: (207)439-6023 FAX: (207)439-2128

SCALE: 1" = 40'	APPROVED BY:	DRAWN BY: STB
DATE: 1/11/16		REVISION : DATE D : 8/19/16
JOB NO: C141-16	CAD FILE: FENDERSON MASTER	SHEET 2.4

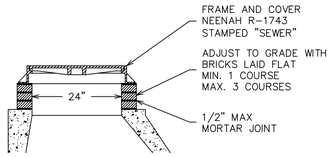

STANDARD COVER AND FRAME
SCALE: NTS

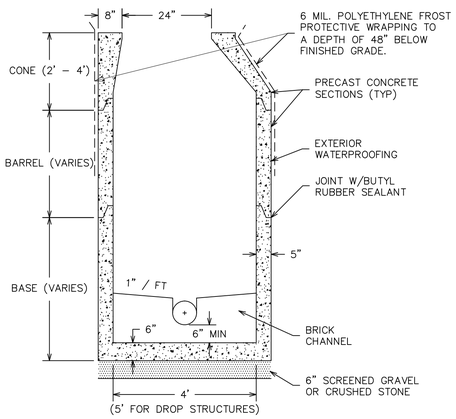

TYPICAL SANITARY MANHOLE
SCALE: NTS

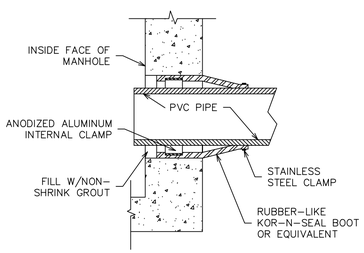

TYPICAL BOOT GASKET
SCALE: NTS

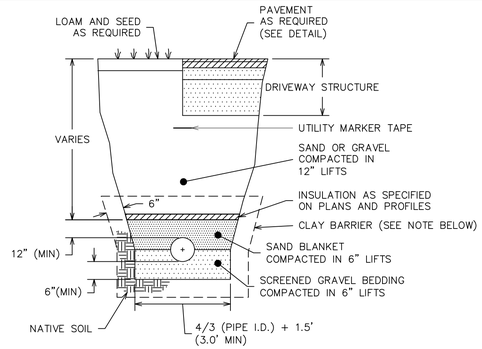

SEWER PIPE TRENCH DETAIL
SCALE: NTS

TRENCH TO BE SUPPORTED BY SLOPING BACK AT
2:1 OR OTHER ACCEPTABLE METHOD.

CLAY BARRIERS (12" THICK, APPROX. 100' INTERVALS) ALONG THE
PIPE BEDDING SHALL BE INSTALLED IN AREAS OF HIGH
~~GROUNDWATER OR AS DIRECTED BY THE INSPECTING ENGINEER.~~
SEWER PIPE: SDR 35 (OR EQUAL), 8" MIN. DIA.

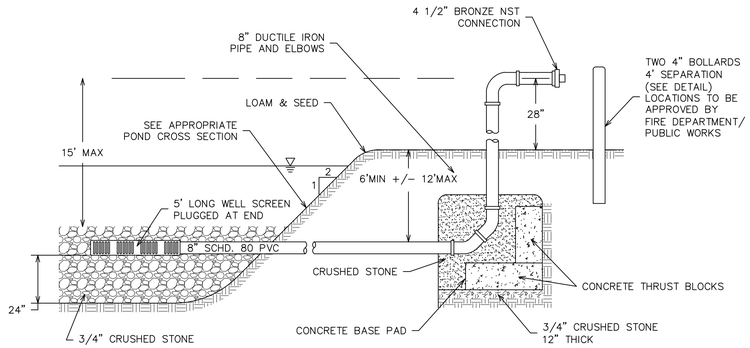

DRY HYDRANT DETAIL
(NTS)

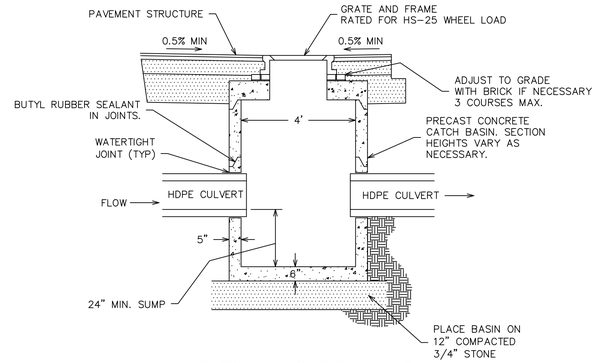

TYPICAL CATCH BASIN
(NTS)

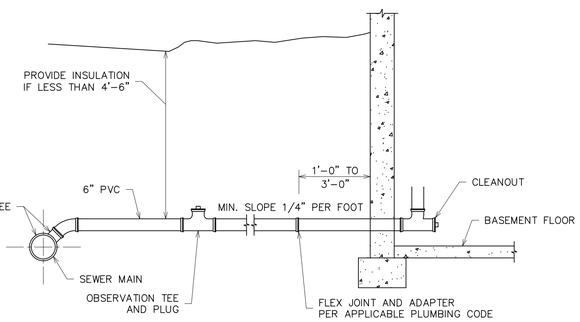

TYPICAL SERVICE CONNECTION AND HOUSE LATERAL DETAIL
SCALE: NTS

NOTE: HOUSE SEWER MAY BE LOCATED BENEATH BASEMENT FLOOR

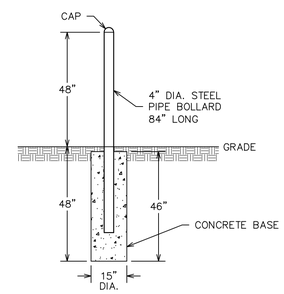

PROTECTIVE BOLLARD DETAIL
(NTS)

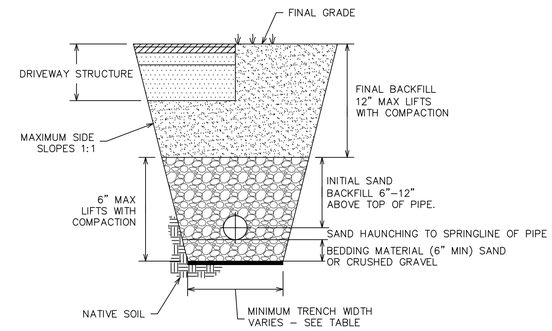

HDPE CULVERT TRENCH DETAIL
(NTS)

TRENCH TO BE SUPPORTED BY SLOPING BACK AT
2:1 OR OTHER ACCEPTABLE METHOD.

NOMINAL DIAMETER (IN)	MIN. TRENCH WIDTH (IN)
4	21
6	23
8	25
10	28
12	31
15	34
18	39
24	48
30	66
36	78
42	83
48	89
60	102

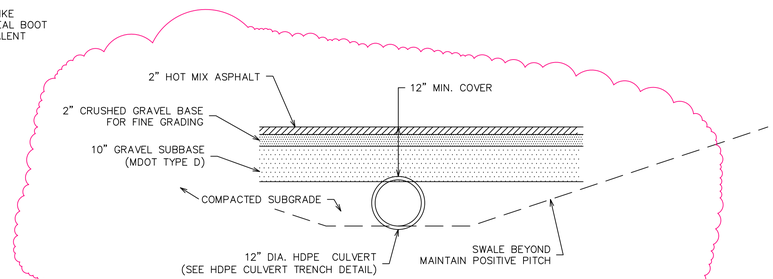

RESIDENTIAL DRIVEWAY CROSS SECTION
(NTS)

GRAVEL FILL TO BE COMPACTED TO 95% MODIFIED PROCTOR

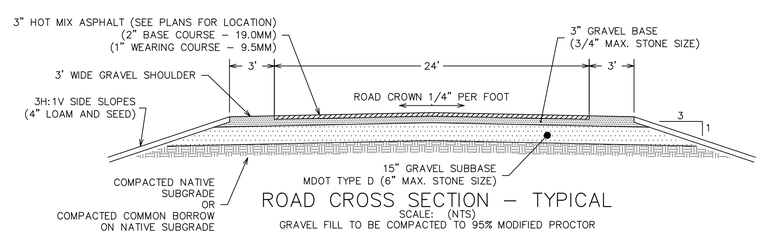

ROAD CROSS SECTION – TYPICAL
SCALE: (NTS)

GRAVEL FILL TO BE COMPACTED TO 95% MODIFIED PROCTOR

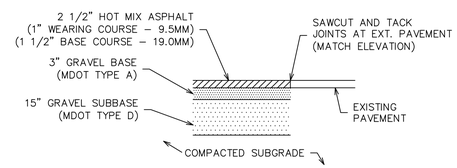

ASPHALT PARKING (DRIVEWAY) CROSS SECTION
(NTS)

GRAVEL FILL TO BE COMPACTED TO 95% MODIFIED PROCTOR

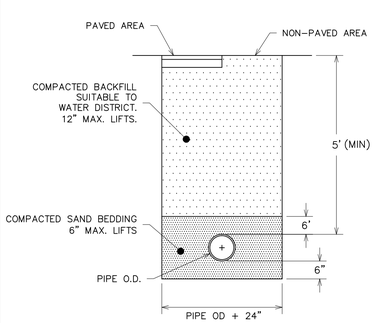

WATER LINE TRENCH DETAIL
(NTS)

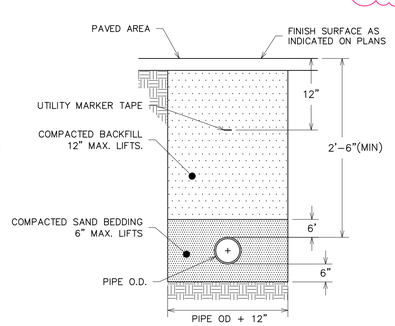

UTILITY CONDUIT TRENCH DETAIL
(NTS)

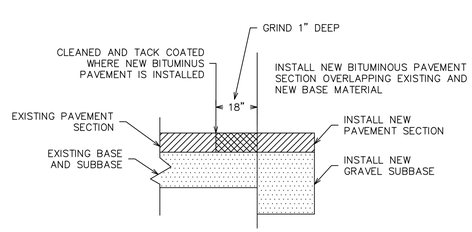

PAVEMENT JOINT CROSS SECTION
NEW PAVEMENT ABUTTING EXISTING PAVEMENT
(NTS)

NO.	DESCRIPTION	DATE	
B.	REVISED TYPICAL ROAD X-SECTION.	8/19/16	
A.	MDEP SUBMITTAL.	3/8/16	

REVISIONS

SITE DETAILS
WIRE ROAD SUBDIVISION
WIRE ROAD, WELLS, ME

FOR: HIGHPINE PROPERTIES, LLC
P.O. BOX 339
WELLS, ME 04090

ATTAR ENGINEERING, INC.
CIVIL ◆ STRUCTURAL ◆ MARINE
1284 STATE ROAD – ELIOT, MAINE 03903
PHONE: (207)439-6023 FAX: (207)439-2128

SCALE: AS NOTED	APPROVED BY:	DRAWN BY: STB
DATE: 1/11/16		REVISION : DATE B : 8/19/16
JOB NO: C141-16	CAD FILE: WIRE ROAD DET	SHEET 5.1

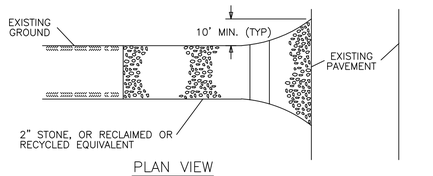

PLAN VIEW

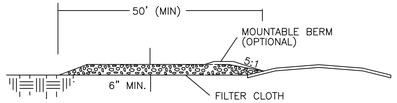

PROFILE

NOTES:

1. GEOTEXTILE: PLACE FILTER CLOTH OVER ENTIRE AREA TO BE COVERED WITH AGGREGATE. FILTER CLOTH WILL NOT BE REQUIRED ON A SINGLE FAMILY RESIDENTIAL LOT.

2. PIPING OF SURFACE WATER UNDER ENTRANCE SHALL BE PROVIDED AS REQUIRED. IF PIPING IS IMPOSSIBLE, A MOUNTABLE BERM WITH A 5:1 SLOPE WILL BE PERMITTED.

STABILIZED CONSTRUCTION ENTRANCE

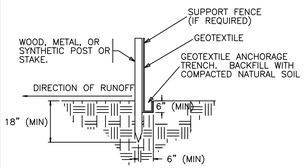

TOE – IN METHOD

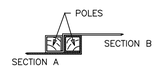

TOP VIEW
(CONNECTION)

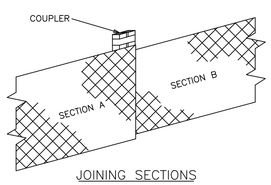

NOTES:

1. DEPENDING UPON THE CONFIGURATION, ATTACH GEOTEXTILE TO WIRE MESH WITH HOG RINGS, TO STEEL POSTS WITH TIE WIRES, AND TO WOOD POSTS WITH STAPLES.

2. POSTS MAY BE WIRED TOGETHER WHEN JOINING SECTIONS.

JOINING SECTIONS

THE COUPLER CAN BE ANY ACCEPTABLE DEVICE USED TO TIE THE POLES TOGETHER

TEMPORARY SILT FENCE – NTS

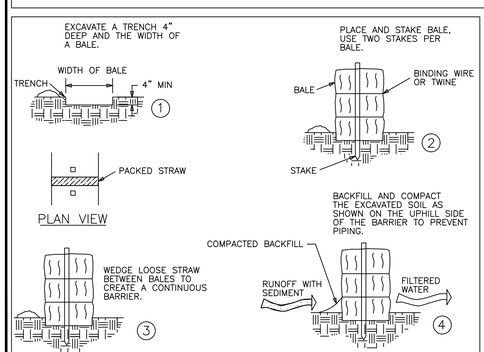

NOTES:

1. PLACE BALES IN A SINGLE ROW, LENGTHWISE ON THE CONTOUR.

2. PLACE BALES 10' AWAY FROM THE TOE OF SLOPE.

3. IN SLOPING AREAS WHERE SURFACE FLOW FOLLOWS THE BALE LINE, INSTALL PERPENDICULAR BALE CHECKS AT APPROPRIATE INTERVALS (100' MAX.)

HAY BALE BARRIER
(NTS)

EROSION AND SEDIMENTATION CONTROL NOTES

1. SILTATION FENCE OR HAY BALE BARRIERS WILL BE INSTALLED DOWNSLOPE OF ALL STRIPPING OR CONSTRUCTION OPERATIONS. A DOUBLE SILT FENCE BARRIER SHALL BE INSTALLED DOWNSLOPE OF ANY SOIL MATERIAL STOCKPILES. SILT FENCES SHALL BE INSPECTED AFTER EACH RAIN EVENT AND DAILY DURING PROLONGED RAIN. SILT AND SOIL PARTICLES ACCUMULATING BEHIND THE FENCE SHALL BE REMOVED AFTER EACH SIGNIFICANT RAIN EVENT AND IN NO INSTANCE SHOULD ACCUMULATION EXCEED 1/2 THE HEIGHT OF THE FENCE. TORN OR DAMAGED AREAS SHALL BE REPAIRED.

2. TEMPORARY AND PERMANENT VEGETATION AND MULCHING IS AN INTEGRAL COMPONENT OF THE EROSION AND SEDIMENTATION CONTROL PLAN. ALL AREAS SHALL BE INSPECTED AND MAINTAINED UNTIL THE DESIRED VEGETATIVE COVER IS ESTABLISHED. THESE CONTROL MEASURES ARE ESSENTIAL TO EROSION PREVENTION AND ALSO REDUCE COSTLY REWORK OF GRADED AND SHAPED AREAS.

3. SEEDING, FERTILIZER AND LIME RATES AND TIME OF APPLICATION WILL BE DEPENDENT ON SOIL REQUIREMENTS. TEMPORARY VEGETATION SHALL BE MAINTAINED IN THESE AREAS UNTIL PERMANENT SEEDING IS APPLIED. ADDITIONALLY, EROSION AND SEDIMENTATION MEASURES SHALL BE MAINTAINED UNTIL PERMANENT VEGETATION IS ESTABLISHED.

4. ALL LAWN AREA, OUTER POND SIDE SLOPES AND SWALES SHALL BE PERMANENTLY SEEDED WITH THE FOLLOWING MIXTURE: 20 LB/ACRE CREEPING RED FESCUE, 2 LB/ACRE REDTOP AND 20 LB/ACRE TALL FESCUE FOR A TOTAL OF 42 LB/ACRE. FERTILIZER AND LIME RATES SHALL BE DEPENDENT ON SOIL TESTING. IN THE ABSENCE OF SOIL TESTS, FERTILIZE WITH 10–20–20 (N–P205–K201) AT 800 LB/ACRE AND LIME AT 3 TONS/ACRE. MULCH WITH HAY AT 70–90 LB/1000 S.F. 4" OF LOAM SHALL BE APPLIED PRIOR TO SEEDING.

5. POND BOTTOMS AND INNER POND SIDESLOPES SHALL BE PERMANENTLY SEEDED WITH THE FOLLOWING MIXTURE: 20 LB/ACRE CREEPING RED FESCUE, 8 LB/ACRE BIRDSFOOT TREFOIL AND 20 LB/ACRE TALL FESCUE FOR A TOTAL OF 48 LB/ACRE. SEE THE ABOVE NOTE FOR FERTILIZER, LIME AND MULCHING RATES.

6. TEMPORARY VEGETATION OF ALL DISTURBED AREAS, MATERIAL STOCKPILES AND OTHER SUCH AREAS SHALL BE ESTABLISHED BY SEEDING WITH EITHER WINTER RYE AT A RATE OF 112 LB/ACRE OR ANNUAL RYEGRASS AT A RATE OF 40 LB/ACRE. WINTER RYE SHALL BE USED FOR FALL SEEDING AND ANNUAL RYEGRASS FOR SHORT DURATION SEEDING. SEEDING SHALL BE ACCOMPLISHED BEFORE OCTOBER 1. TEMPORARY STABILIZATION WITH MULCH OF DISTURBED AREAS SHALL TAKE PLACE WITHIN 7 DAYS OF THE CESSATION OF CONSTRUCTION ACTIVITIES IN AN AREA THAT WILL NOT BE WORKED FOR MORE THAN 7 DAYS. AREAS WITHIN 75 FEET OF A WETLAND OR WATERBODY SHALL BE TEMPORARILY STABILIZED WITH MULCH WITHIN 48 HOURS OF THE INITIAL DISTURBANCE OR PRIOR TO ANY STORM EVENT, WHICHEVER COMES FIRST.

7. TEMPORARY SEEDING OF DISTURBED AREAS SHALL BE ACCOMPLISHED BEFORE OCTOBER 1. PERMANENT SEEDING SHALL BE ACCOMPLISHED BEFORE SEPTEMBER 15.

8. ALL SEEDED AREAS SHALL BE MULCHED WITH HAY AT A RATE OF 2 BALES (70–90 LB) PER 1000 S.F. OF SEEDED AREA.

9. ALL DISTURBED AREAS ON THE SITE SHALL BE PERMANENTLY STABILIZED WITHIN 7 DAYS OF FINAL GRADING OR TEMPORARILY STABILIZED PER E&S NOTE 6. PERMANENT STABILIZATION MEANS 90% COVER WITH MATURE, HEALTHY PLANTS FOR PLANTED AREAS AND FOR SODDED AREAS, COMPLETE BINDING OF SOD ROOTS INTO THE UNDERLYING SOIL WITH NO SLUMPING OF THE SOD OR DIE–OFF.

10. A STABILIZED CONSTRUCTION ENTRANCE SHALL BE INSTALLED AT ALL ACCESSES TO PUBLIC ROADS (SEE PLAN). TEMPORARY CULVERTS SHALL BE PROVIDED AS REQUIRED.

11. SLOPES 2:1 OR STEEPER SHALL BE TREATED WITH POLYJUTE OPEN WEAVE GEOTEXTILE (OR EQUIVALENT) AFTER SEEDING. JUTE MATS SHALL BE ANCHORED PER MANUFACTURER'S SPECIFICATIONS.

12. EXCESSIVE DUST CAUSED BY CONSTRUCTION OPERATIONS SHALL BE CONTROLLED BY APPLICATION OF WATER OR CALCIUM CHLORIDE.

13. THE CONTRACTOR MAY OPT TO USE EROSION CONTROL MIX BERM AS A SEDIMENT BARRIER IN LIEU OF SILTATION FENCE OR HAY BALE BARRIERS WITH APPROVAL FROM THE INSPECTING ENGINEER.

14. SEDIMENT BARRIERS SHALL BE DOUBLED WITH 75' OF WETLANDS OR OTHER PROTECTED NATURAL RESOURCES.

15. TEMPORARY E&S CONTROL MEASURES SHALL BE REMOVED WITHIN 30 DAYS OF PERMANENT STABILIZATION. ACCUMULATED SEDIMENTS SHALL BE REMOVED AND THE AREA STABILIZED.

16. THE CONTRACTOR SHALL BE RESPONSIBLE FOR ADEQUATE HOUSEKEEPING PRACTICES DURING THE CONSTRUCTION OF THE PROJECT. THESE STANDARDS CAN BE FOUND IN THE FOLLOWING DOCUMENT: MDEP CHAPTER 500 (STORMWATER MANAGEMENT), APPENDIX C. HOUSEKEEPING. HOUSEKEEPING PRACTICES INCLUDE, BUT ARE NOT LIMITED TO, SPILL PREVENTION, GROUNDWATER PROTECTION, FUGITIVE SEDIMENT AND DUST, DEBRIS AND OTHER MATERIALS, EXCAVATION DEWATERING, AUTHORIZED NON–STORMWATER DISCHARGES AND UNAUTHORIZED NON–STORMWATER DISCHARGES.

17. WHENEVER PRACTICABLE, NO DISTURBANCE ACTIVITIES SHOULD TAKE PLACE WITHIN 50 FEET OF ANY PROTECTED NATURAL RESOURCE. IF DISTURBANCE ACTIVITIES TAKE PLACE BETWEEN 30 FEET AND 50 FEET OF ANY PROTECTED NATURAL RESOURCE, AND STORMWATER DISCHARGES THROUGH THE DISTURBED AREAS TOWARD THE PROTECTED NATURAL RESOURCE, PERIMETER EROSION CONTROLS MUST BE DOUBLED. IF DISTURBANCE ACTIVITIES TAKE PLACE LESS THAN 30 FEET FROM ANY PROTECTED NATURAL RESOURCE, AND STORMWATER DISCHARGES THROUGH THE DISTURBED AREAS TOWARD THE PROTECTED NATURAL RESOURCE, PERIMETER EROSION CONTROLS MUST BE DOUBLED AND DISTURBED AREAS MUST BE TEMPORARILY OR PERMANENTLY STABILIZED WITHIN 7 DAYS.

E&S INSPECTION/MAINTENANCE DURING CONSTRUCTION

A. INSPECTION AND CORRECTIVE ACTION. INSPECT DISTURBED AND IMPERVIOUS AREAS, EROSION CONTROL MEASURES, MATERIALS STORAGE AREAS THAT ARE EXPOSED TO PRECIPITATION, AND LOCATIONS WHERE VEHICLES ENTER OR EXIT THE SITE. INSPECT THESE AREAS AT LEAST ONCE A WEEK AS WELL AS BEFORE AND WITHIN 24 HOURS AFTER A STORM EVENT (RAINFALL), AND PRIOR TO COMPLETING PERMANENT STABILIZATION MEASURES. A PERSON WITH KNOWLEDGE OF EROSION AND STORMWATER CONTROL, INCLUDING THE STANDARDS AND CONDITIONS IN THE PERMIT, SHALL CONDUCT THE INSPECTIONS.

B. MAINTENANCE. IF BEST MANAGEMENT PRACTICES (BMPS) NEED TO BE REPAIRED, THE REPAIR WORK SHOULD BE INITIATED UPON DISCOVERY OF THE PROBLEM BUT NO LATER THAN THE END OF THE NEXT WORKDAY. IF ADDITIONAL BMPS OR SIGNIFICANT REPAIR OF BMPS ARE NECESSARY, IMPLEMENTATION MUST BE COMPLETED WITHIN 7 CALENDAR DAYS AND PRIOR TO ANY STORM EVENT (RAINFALL). ALL MEASURES MUST BE MAINTAINED IN EFFECTIVE OPERATING CONDITION UNTIL AREAS ARE PERMANENTLY STABILIZED.

C. DOCUMENTATION. KEEP A LOG (REPORT) SUMMARIZING THE INSPECTIONS AND ANY CORRECTIVE ACTION TAKEN. THE LOG MUST INCLUDE THE NAME(S) AND QUALIFICATIONS OF THE PERSON MAKING THE INSPECTIONS, THE DATE(S) OF THE INSPECTIONS, AND MAJOR OBSERVATIONS ABOUT THE OPERATION AND MAINTENANCE OF EROSION AND SEDIMENTATION CONTROLS, MATERIALS STORAGE AREAS, AND VEHICLES ACCESS POINTS TO THE PARCEL. MAJOR OBSERVATIONS MUST INCLUDE BMPS THAT NEED MAINTENANCE, BMPS THAT FAILED TO OPERATE AS DESIGNED OR PROVED INADEQUATE FOR A PARTICULAR LOCATION, AND LOCATION(S) WHERE ADDITIONAL BMPS ARE NEEDED. FOR EACH BMP REQUIRING MAINTENANCE, BMP NEEDING REPLACEMENT, AND LOCATION NEEDING ADDITIONAL BMPS, NOTE IN THE LOG THE CORRECTIVE ACTION TAKEN AND WHEN IT WAS TAKEN. THE LOG MUST BE MADE ACCESSIBLE TO DEPARTMENT STAFF AND A COPY MUST BE PROVIDED UPON REQUEST. THE PERMITTEE SHALL RETAIN A COPY OF THE LOG FOR A PERIOD OF AT LEAST THREE YEARS FROM THE COMPLETION OF PERMANENT STABILIZATION.

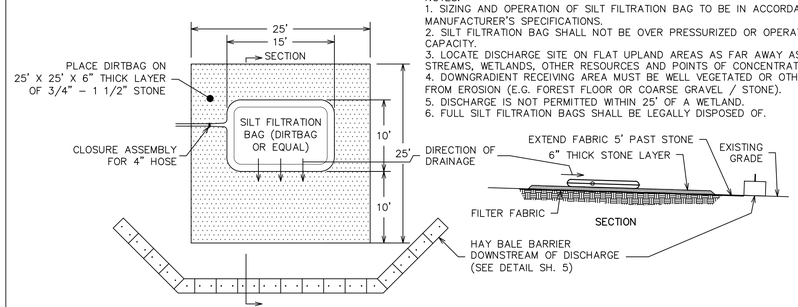

NOTES:
1. SIZING AND OPERATION OF SILT FILTRATION BAG TO BE IN ACCORDANCE WITH MANUFACTURER'S SPECIFICATIONS.
2. SILT FILTRATION BAG SHALL NOT BE OVER PRESSURIZED OR OPERATED BEYOND CAPACITY.
3. LOCATE DISCHARGE SITE ON FLAT UPLAND AREAS AS FAR AWAY AS POSSIBLE FROM STREAMS, WETLANDS, OTHER RESOURCES AND POINTS OF CONCENTRATED FLOW.
4. DOWNGRADIENT RECEIVING AREA MUST BE WELL VEGETATED OR OTHERWISE STABLE FROM EROSION (E.G. FOREST FLOOR OR COARSE GRAVEL / STONE).
5. DISCHARGE IS NOT PERMITTED WITHIN 25' OF A WETLAND.
6. FULL SILT FILTRATION BAGS SHALL BE LEGALLY DISPOSED OF.

CONSTRUCTION DEWATERING FILTER DETAIL FOR PUMPED DISCHARGE
(NTS)

ROAD & DRIVEWAY CONSTRUCTION NOTES

1. ROADS & DRIVEWAYS TO BE CONSTRUCTED IN ACCORDANCE WITH THE APPROPRIATE CROSS SECTION DETAIL. GRAVEL FILL TO BE COMPACTED TO 95% MODIFIED PROCTOR IN ACCORDANCE WITH ASTM D 1557. LIFT THICKNESSES TO BE A MAXIMUM OF 6".

2. ALL STUMPS, ORGANIC MATERIAL, ROCKS AND BOULDERS TO BE REMOVED TO A MINIMUM DEPTH OF 24" BELOW SUBBASE.

3. ALL STUMPS, LEDGE AND LARGE BOULDERS TO BE REMOVED FROM THE CONSTRUCTION AREA. THE CONSTRUCTION AREA SHALL BE CLEARED AND ROUGH GRADED.

4. ALL CULVERTS TO BE ADS N–12 (HDPE) OR APPROVED EQUAL. CULVERT INLETS AND OUTLETS TO BE PROTECTED IN ACCORDANCE WITH THE CULVERT INLET/OUTLET PROTECTION DETAIL.

5. THE CONTRACTOR MUST CONTACT DIG SAFE AND ALL LOCAL UTILITIES PRIOR TO THE START OF CONSTRUCTION TO VERIFY THE LOCATION OF EXISTING SUBSURFACE UTILITIES AND CONDITIONS. LOCATING AND PROTECTING ANY UNDERGROUND OR ABOVE GROUND UTILITY IS THE SOLE RESPONSIBILITY OF THE CONTRACTOR.

WINTER CONSTRUCTION NOTES

1. EXPOSED AREAS SHOULD BE LIMITED TO AN AREA THAT CAN BE MULCHED IN ONE DAY PRIOR TO ANY SNOW EVENT.

NOVEMBER 1 – APRIL 15

2. AN AREA SHALL BE CONSIDERED STABILIZED WHEN EXPOSED SURFACES HAVE BEEN EITHER MULCHED WITH HAY AT A RATE OF 140–180 LB/1000 S.F. (DOUBLE THE NORMAL RATE) OR DORMANT SEEDED, MULCHED AND ADEQUATELY ANCHORED BY AN APPROVED ANCHORING TECHNIQUE. IN ALL CASES, MULCH SHALL BE APPLIED SO THAT THE SOIL SURFACE IS NOT VISIBLE THROUGH THE MULCH.

3. FROM OCTOBER 15 TO APRIL 1, LOAM AND SEED WILL NOT BE REQUIRED. DURING PERIODS OF TEMPERATURES ABOVE FREEZING, DISTURBED AREAS SHALL BE FINE GRADED AND PROTECTED WITH MULCH OR TEMPORARILY SEEDED AND MULCHED UNTIL PERMANENT SEEDING CAN BE APPLIED. AFTER NOVEMBER 1, DISTURBED AREAS MAY BE LOAMED, FINE GRADED AND DORMANT SEEDED AT A RATE 200–300% HIGHER THAN THE SPECIFIED PERMANENT SEEDING RATE. IF CONSTRUCTION CONTINUES DURING FREEZING WEATHER, DISTURBED AREAS SHALL BE GRADED BEFORE FREEZING AND TEMPORARILY STABILIZED WITH MULCH. DISTURBED AREAS SHALL NOT BE LEFT OVER THE WINTER OR FOR ANY OTHER EXTENDED PERIOD OF TIME UNLESS STABILIZED WITH MULCH.

4. FROM NOVEMBER 1 TO APRIL 15 ALL MULCH SHALL BE ANCHORED BY EITHER PEG LINE, MULCH NETTING, ASPHALT EMULSION CHEMICAL, TRACK OR WOOD CELLULOSE FIBER. MULCH NETTING SHALL BE USED TO ANCHOR MULCH IN ALL DRAINAGE WAYS WITH SLOPES GREATER THAN 3%, SLOPES EXPOSED TO DIRECT WINDS AND FOR SLOPES GREATER THAN 8%. MULCH NETTING SHALL BE USED TO ANCHOR MULCH IN ALL AREAS WITH SLOPES GREATER THAN 15%. AFTER OCTOBER 1, THE SAME APPLIES TO ALL SLOPES GREATER THAN 8%.

5. DURING WINTER CONSTRUCTION, DORMANT SEEDING OR MULCH AND ANCHORING SHALL BE APPLIED TO ALL DISTURBED AREAS AT THE END OF EACH WORKING DAY.

6. SNOW SHALL BE REMOVED FROM AREAS OF SEEDING AND MULCHING PRIOR TO PLACEMENT.

7. ALL VEGETATED DITCH LINES THAT HAVE NOT BEEN STABILIZED BY NOVEMBER 1, OR WILL BE WORKED DURING THE WINTER CONSTRUCTION PERIOD, MEST BE STABILIZED WITH AN APPROPRIATE STONE LINING BACKED BY AN APPROPRIATE GRAVEL BED OR GEOTEXTILE UNLESS SPECIFICALLY RELEASED FROM THIS STANDARD BY THE MDEP.

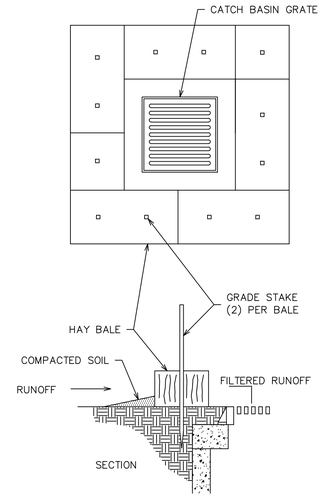

HAY BALE FILTER FOR CATCH BASIN
(NTS)

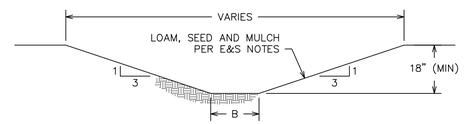

VEGETATED SWALE DETAIL
NTS

B (BOTTOM WIDTH) SHALL BE 2' FOR TYPE 1 SWALES AND 5' FOR TYPE 2 SWALES.

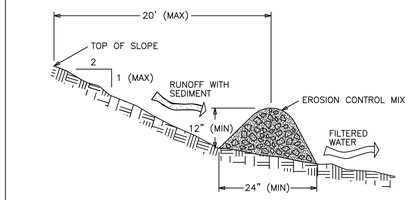

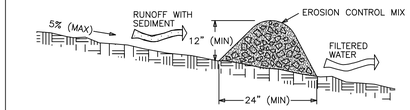

EROSION CONTROL MIX COMPOSITION STANDARDS:

– THE ORGANIC MATTER CONTENT SHALL BE BETWEEN 80 AND 100%, DRY WEIGHT BASIS.

– PARTICLE SIZE BY WEIGHT SHALL BE 100% PASSING A 6" SCREEN AND A MINIMUM OF 70%, MAXIMUM OF 85% PASSING A 0.75" SCREEN.

– THE ORGANIC PORTION NEEDS TO BE FIBROUS AND ELONGATED

– LARGE PORTIONS OF SILTS, CLAYS OR FINE SANDS ARE NOT ACCEPTABLE IN THE MIX

– SOLUBLE SALTS CONTENT SHALL BE <4.0 mmhos/cm

– THE pH SHOULD FALL BETWEEN 5.0 AND 8.0

EROSION CONTROL MIX BERM
(NTS)

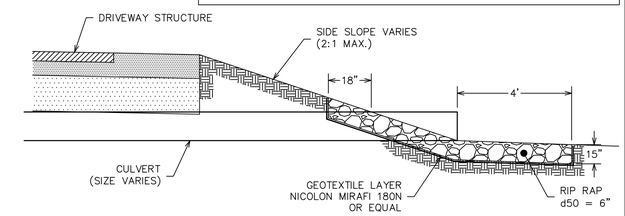

CULVERT INLET/OUTLET PROTECTION DETAIL
(NTS)

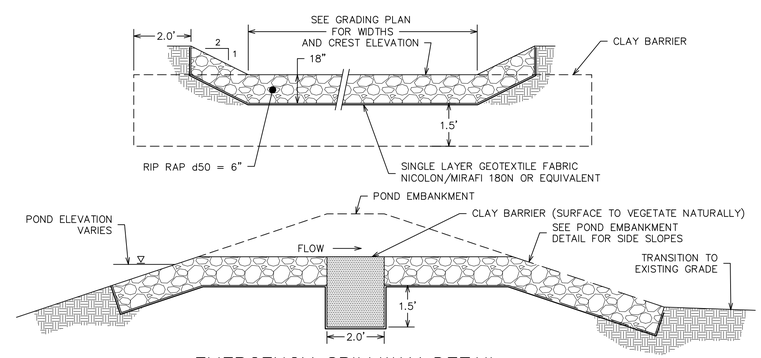

EMERGENCY SPILLWAY DETAIL
(NTS)

NO.	DESCRIPTION	DATE
C.	GENERAL REVISIONS.	8/19/16
B.	MDEP REVIEW REVISIONS.	5/13/16
A.	MDEP SUBMITTAL.	3/8/16

REVISIONS

SITE DETAILS
WIRE ROAD SUBDIVISION
WIRE ROAD, WELLS, ME

FOR: HIGHPINE PROPERTIES, LLC
P.O. BOX 339
WELLS, ME 04090

ATTAR ENGINEERING, INC.
CIVIL ◆ STRUCTURAL ◆ MARINE
1284 STATE ROAD – ELIOT, MAINE 03903
PHONE: (207)439–6023 FAX: (207)439–2128

SCALE: AS NOTED	APPROVED BY:	DRAWN BY: STB
DATE: 1/11/16		REVISION : DATE C : 8/19/16
JOB NO: C141–16	CAD FILE: WIRE ROAD DET	SHEET 5.2

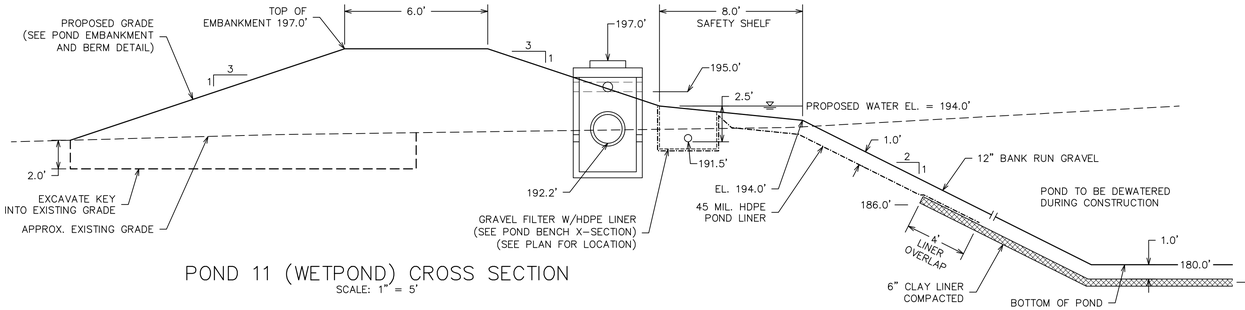

POND 11 (WETPOND) CROSS SECTION
SCALE: 1" = 5'

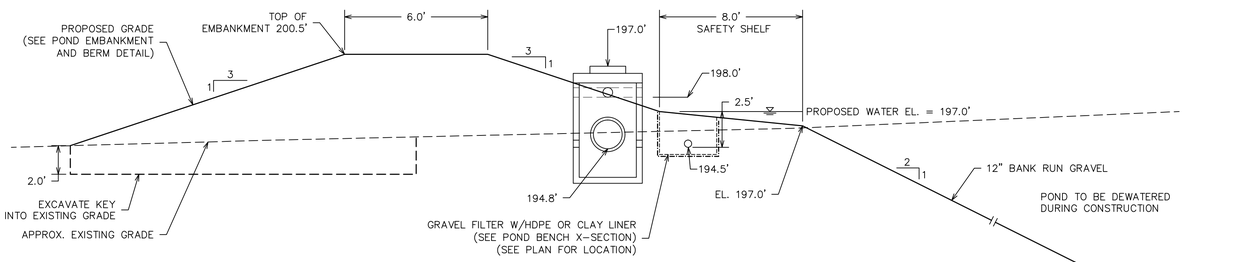

POND 40 (WETPOND) CROSS SECTION
SCALE: 1" = 5'

CONSTRUCTION OVERSIGHT REQUIRED (WETPONDS):

INSPECTION OF THE WETPOND SHALL BE PROVIDED FOR EACH PHASE OF CONSTRUCTION BY THE DESIGN ENGINEER WITH REQUIRED REPORTING TO THE DEP. AT A MINIMUM, INSPECTIONS WILL OCCUR:

- WHEN POND EMBANKMENT SUBGRADE IS PREPARED;
- DURING INSTALLATION OF THE GRAVEL TRENCH FILTER;
- AFTER INLET/OUTLET STRUCTURES HAVE BEEN INSTALLED AND FINAL SOIL STABILIZATION MEASURES ARE IN PLACE;
- AFTER ONE YEAR TO INSPECT HEALTH OF THE VEGETATION AND MAKE CORRECTIONS;
- ALL THE GRAVEL TRENCH MATERIAL SHALL BE APPROVED BY THE DESIGN ENGINEER AFTER TESTS BY A CERTIFIED LABORATORY SHOW THAT THEY ARE PASSING DEP SPECIFICATIONS.
- CONTRACTOR SHALL COORDINATE INSPECTION SCHEDULE WITH INSPECTING ENGINEER PRIOR TO CONSTRUCTION.

CLAY LINER SPECIFICATIONS:

1. USCS SOIL CLASSIFICATION – CL
2. MINIMUM PLASTICITY INDEX OF 12 AS TESTED BY ATTERBERG LIMIT TESTS (ASTM D4318).
3. DURING PLACEMENT AND COMPACTION, THE MOISTURE CONTENT OF THE CLAY SHALL BE MAINTAINED ABOVE OPTIMUM MOISTURE AS DETERMINED BY THE STANDARD PROCTOR TEST (ASTM D698) OR MODIFIED PROCTOR TEST (ASTM D1557). COMPACTION SHALL BE A MINIMUM OF 95% OF STANDARD PROCTOR DRY DENSITY (ASTM D698) OR 90% OF MODIFIED PROCTOR DRY DENSITY (ASTM D1557), AT A MOISTURE CONTENT ABOVE OPTIMUM MOISTURE.
4.

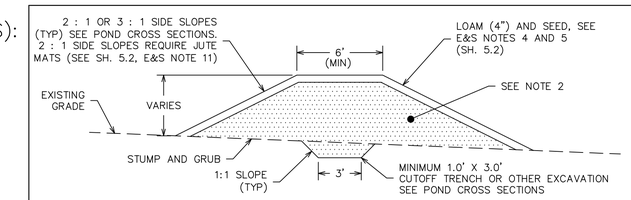

POND EMBANKMENT AND BERM DETAIL
SCALE: 1" = 5'

EMBANKMENT CONSTRUCTION NOTES

1. ALL ORGANIC MATERIAL, STUMPS, ROCKS AND BOULDERS SHALL BE REMOVED TO A MINIMUM DEPTH OF 24" BELOW SUBGRADE OF THE BASIN EMBANKMENT. ALL EXCAVATIONS BELOW THE BASIN EMBANKMENT SHALL HAVE A MINIMUM SLOPE OF 1H : 1V.

2. ALL BASIN EMBANKMENT FILL MATERIAL SHALL BE WELL GRADED BORROW WITH A MINIMUM OF 20% FINES CONTENT. EMBANKMENT FILL SHALL BE PLACED IN 12" (MAX.) LIFTS AND BE COMPACTED TO 95% MODIFIED PROCTOR. A CUTOFF TRENCH SHALL BE EXCAVATED AS SHOWN PRIOR TO CONSTRUCTION OF EMBANKMENT.

3. DETENTION BASIN AND ALL EXCAVATIONS SHALL BE KEPT FREE OF WATER DURING CONSTRUCTION.

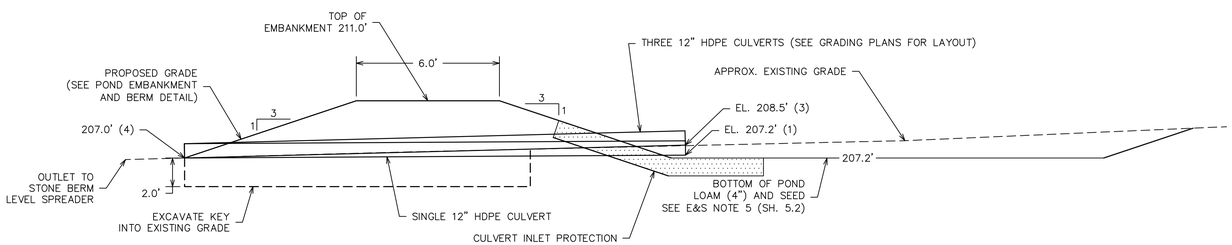

POND 55 (DETENTION POND) CROSS SECTION
SCALE: 1" = 5'

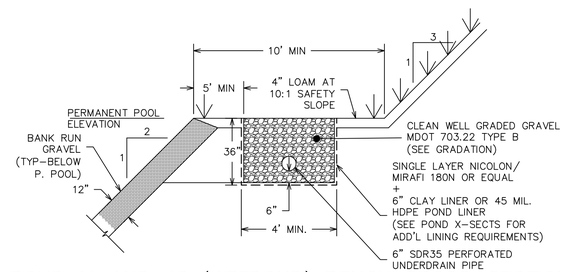

POND 11 AND 40 (WETPOND) BENCH CROSS–SECTION
(NTS)

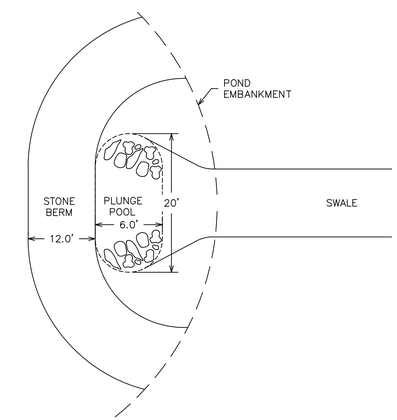

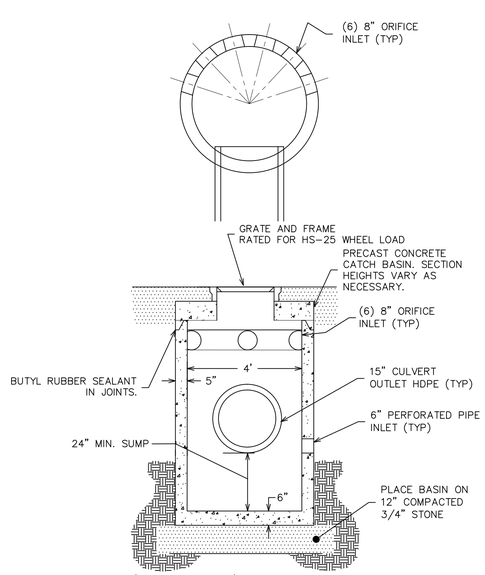

POND 11 & 40 (WETPOND) OUTLET STRUCTURE DETAIL
(NTS)

CONSTRUCTION OVERSIGHT REQUIRED (DETENTION POND):

INSPECTION OF THE DETENTION POND SHALL BE PROVIDED FOR EACH PHASE OF CONSTRUCTION BY THE DESIGN ENGINEER WITH REQUIRED REPORTING TO THE DEP. AT A MINIMUM, INSPECTIONS WILL OCCUR:

- WHEN POND EMBANKMENT SUBGRADE IS PREPARED;
- AFTER INLET/OUTLET STRUCTURES HAVE BEEN INSTALLED AND FINAL SOIL STABILIZATION MEASURES ARE IN PLACE;
- AFTER ONE YEAR TO INSPECT HEALTH OF THE VEGETATION AND MAKE CORRECTIONS;
- CONTRACTOR SHALL COORDINATE INSPECTION SCHEDULE WITH INSPECTING ENGINEER PRIOR TO CONSTRUCTION.

MDOT 703.22 TYPE B

SIEVE SIZE	% BY WEIGHT	
1"	90–100	
1/2"	75–100	
#4	50–100	
#20	15–80	
#50	0–15	*
#200	0–5	

* AT LEAST 10% SHALL PASS THE #50 SIEVE

STONE GRADATION REQUIREMENTS

SIEVE (METRIC)	SIEVE (US CUSTOMARY)	% PASSING (BY WEIGHT)
300 MM	12 IN	100
150 MM	6 IN	84–100
75 MM	3 IN	68–83
25.4 MM	1 IN	42–55
4.75 MM	No. 4	8–12

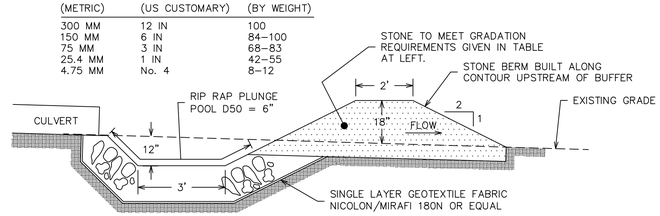

STONE BERM LEVEL SPREADER
(NTS)

CONSTRUCTION OVERSIGHT REQUIRED (STONE BERM LEVEL SPREADER):

INSPECTION OF THE STONE BERM LEVEL SPREAD SHALL BE PROVIDED FOR EACH PHASE OF CONSTRUCTION BY THE DESIGN ENGINEER WITH REQUIRED REPORTING TO THE DEP. AT A MINIMUM, INSPECTIONS WILL OCCUR:

- WHEN SUBGRADE IS PREPARED;
- AFTER INSTALLATION OF THE STONE AND STABILIZATION OF THE AREA;
- CONTRACTOR SHALL COORDINATE INSPECTION SCHEDULE WITH INSPECTING ENGINEER PRIOR TO CONSTRUCTION.

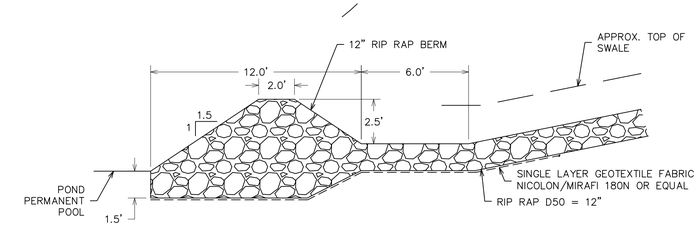

WETPOND FOREBAY
(NTS)

NO.	DESCRIPTION	DATE
D.	GENERAL REVISIONS.	8/19/16
C.	MDEP REVIEW – CLAY LINER SPECS.	6/1/16
B.	MDEP REVIEW REVISIONS.	5/13/16
A.	MDEP SUBMITTAL.	3/8/16

REVISIONS

SITE DETAILS
WIRE ROAD SUBDIVISION
WIRE ROAD, WELLS, ME

FOR: HIGHPINE PROPERTIES, LLC
P.O. BOX 339
WELLS, ME 04090

ATTAR ENGINEERING, INC.
CIVIL ◆ STRUCTURAL ◆ MARINE
1284 STATE ROAD – ELIOT, MAINE 03903
PHONE: (207)439–6023 FAX: (207)439–2128

SCALE: AS NOTED	APPROVED BY:	DRAWN BY: STB
DATE: 1/11/16		REVISION : DATE D : 8/19/16
JOB NO: C141–16	CAD FILE: WIRE ROAD DET	SHEET 5.3

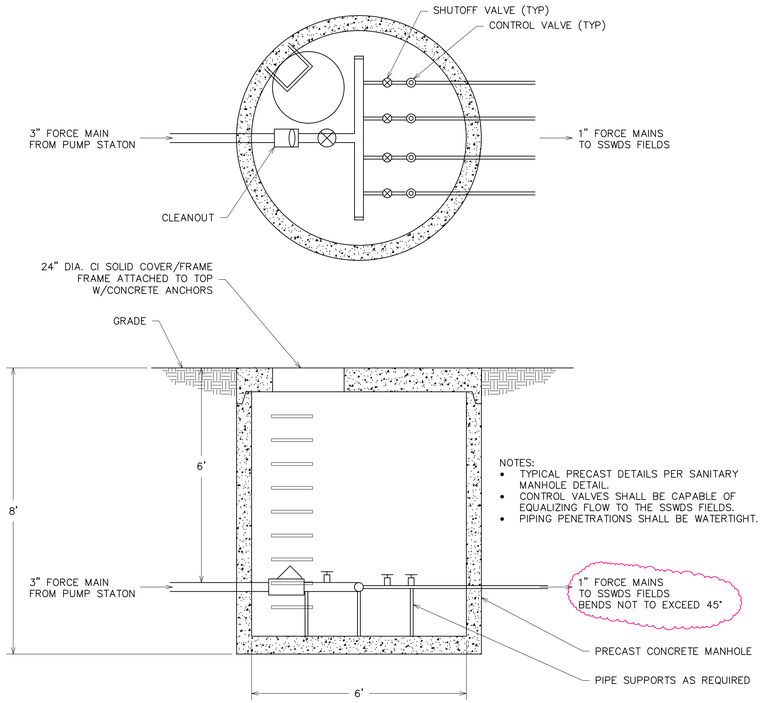

DISTRIBUTION MANHOLE DETAIL

SCALE: NTS

TEST PIT RESULTS SUMMARY

	NUMBER	S.H.W.T.	BEDROCK	TOTAL DEPTH	SOIL PROFILE & CONDITION	SIZE RATING	APPROX. EXT. GRADE
FIELD 1	13	15"	24"	24"	2 C/AIII	MED./LARGE	204.9
	37	17"	42"	42"	3 C/AIII	MED./LARGE	205.7
	38	17"	NONE	50"	3 C	MED./LARGE	204.8
	40	20"	NONE	50"	3 C	MED./LARGE	205.3
FIELD 2	11	NONE	24"	24"	2 A/III	MED./LARGE	198.3
	47	18"	42"	42"	5 C/AIII	MEDIUM	197.3
	48	NONE	22"	22"	2 AIII	MED./LARGE	198.1
FIELD 3	9	29"	NONE	50"	4 C	MEDIUM	201.5
	45	20"	33"	33"	3 C/AIII	MED./LARGE	201.5
	46	18"	36"	36"	4 C/AIII	MEDIUM	199.3
FIELD 4	1	30"	42"	42"	4 C/AIII	MEDIUM	202.8
	43	18"	31"	31"	3 C/AIII	MED./LARGE	204.9
	44	17"	NONE	50"	3 C	MED./LARGE	203.7

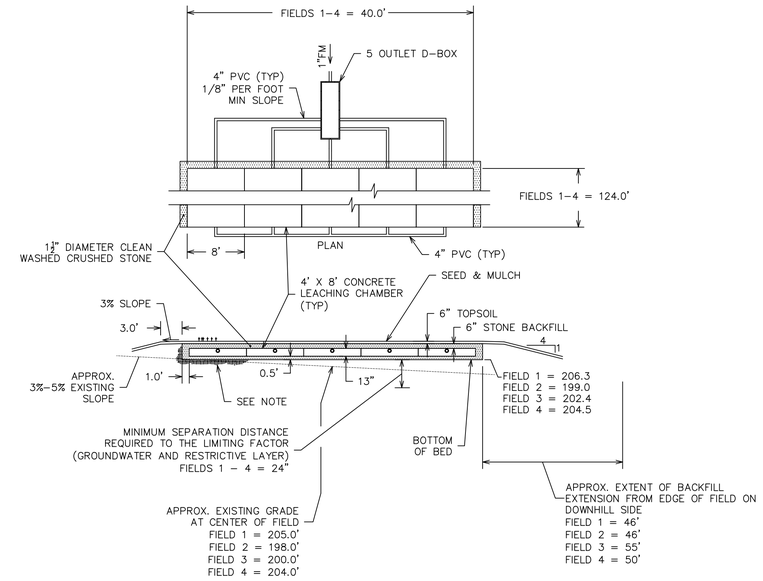

SECTION

SSWDS FIELD DETAIL (FIELDS 1–4)

SCALE: 1" = 10'

NOTE: REMOVE STUMPS, ROCKS, TOPSOIL AND OTHER UNDESIRABLE MATERIAL FOR A MINIMUM OF 24" BELOW BED SUBGRADE. LEVEL/SHIM WITH CLEAN, COARSE SAND AS NECESSARY. SCARIFY NATIVE SOIL PRIOR TO BED PLACEMENT.

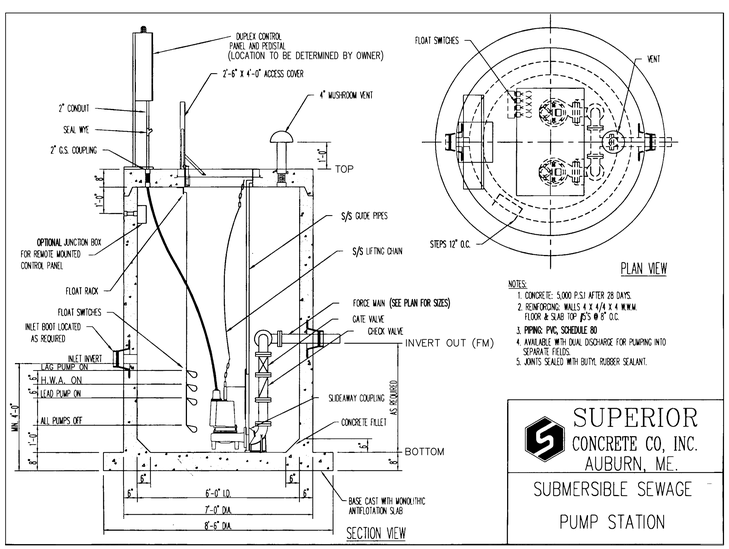

DUPLEX PUMP STATION

(NTS)

PUMP STATION DATA

NO.	BOTTOM	TOP	PUMPS OFF	LEAD PUMP ON	HIGH WATER ALARM	LAG PUMP ON	INVERT IN (FROM MAIN)	INVERT OUT (FM)
PS	186.0	200.0	187.0	189.0	189.5	190.0	189.0	192.0

GENERAL NOTES

1. ALL PUMPS, MOTORS, WIRING AND ASSOCIATED ELECTRICAL COMPONENTS SHALL BE EXPLOSION PROOF.

2. PUMPS SHALL BE:
   BARNES EH1022DS, 1.0HP, 4.5" IMPELLER DIA.
   (OR APPROVED EQUAL)

ADDITIONAL REQUIREMENTS:

– THE CONTROL SYSTEM SHALL INCLUDE REDUNDANT PUMPING CAPACITY.

– REDUNDANT ALARM ACTIVATION.

– LOCAL ALARM AS WELL AS REMOTE ALARM (PLACED IN THE PROJECT OFFICE OR OTHER LOCATION DETERMINED BY THE OWNER).

– ELECTRICAL CONNECTION FOR EMERGENCY POWER OR BACKUP GENERATOR.

– AUTOMATIC AND MANUAL PUMP ACTIVATION.

– RUN TIME METER.

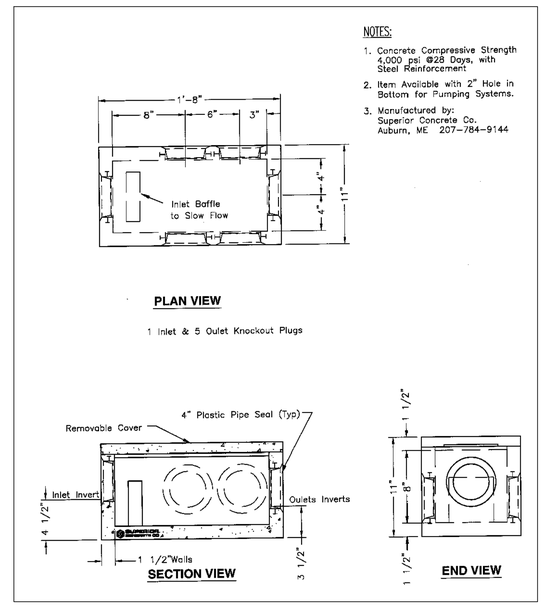

5 OUTLET DISTRIBUTION BOX

AS MANUFACTURED BY SUPERIOR CONCRETE (OR APPROVED EQUAL)

SSWDS NOTES

1. THE SYSTEM WILL SERVE 40, 3 BEDROOM HOMES. EACH TWO HOMES/LOTS WILL SHARE A 1,500 GAL SEPTIC TANK. ALTERNATIVELY, A 1,000 GALLON SEPTIC TANK MAY BE INSTALLED FOR EACH HOME. SEPTIC TANK OUTLETS SHALL BE PROTECTED WITH ZABEL FILTERS.

2. THE SYSTEM DESIGN IS BASED ON TEST PIT LOGS THAT WERE EXCAVATED BY MICHAEL CUOMO (S.E. #211). TEST PITS WERE EXCAVATED IN OCTOBER, 2013; NOVEMBER, 2014 AND DECEMBER, 2015.

3. TOTAL WASTEWATER FLOW WILL BE TREATED BY THE FOUR WASTEWATER FIELDS. FIELDS WILL UTILIZE 4'X8' CONCRETE CHAMBERS [(64 S.F./CHAMBER) – EFFECTIVE AREA].

DESIGN FLOW IS CALCULATED AS FOLLOWS:

[(40 PROPOSED UNITS) X (3 BR)] X (90 GPD/BR) = 10,800 GPD

TOTAL GPD = 10,800 GPD

TOTAL GPD TO EACH FIELD = 10,800/4 = 2,700 GPD

FIELD SIZE IS CALCULATED AS FOLLOWS:

FIELDS 1–4:
CONVENTIONAL FIELD SIZE
(2,700 GPD) X (3.3 S.F./GPD) "MEDIUM–LARGE SOIL FACTOR" = 8,910 S.F.

REQUIRED NUMBER CONCRETE CHAMBERS PER FIELD:
(8,910 S.F.) / (64 S.F./CHAMBER) = 140 (4'X8') CHAMBERS REQUIRED (155 CHAMBERS PROVIDED)

4. DISTRIBUTION FORCE MAINS SHALL BE INSULATED WHERE SOIL COVER IS LESS THAN 4'. 2" THICK, 4' WIDE SHEETS OF RIGID POLYSTYRENE INSULATION, CENTERED ON THE PIPE, SHALL BE PLACED 6" ABOVE THE TOP OF THE PIPE.

NO.	DESCRIPTION	DATE
D.	GENERAL REVISIONS.	8/19/16
C.	REVISED SSWDS FIELDS.	6/10/16
B.	MDEP REVIEW REVISIONS.	5/13/16
A.	MDEP SUBMITTAL.	3/8/16

REVISIONS

SITE DETAILS
WIRE ROAD SUBDIVISION
WIRE ROAD, WELLS, ME

FOR: HIGHPINE PROPERTIES, LLC
P.O. BOX 339
WELLS, ME 04090

ATTAR ENGINEERING, INC.
CIVIL ◆ STRUCTURAL ◆ MARINE
1284 STATE ROAD – ELIOT, MAINE 03903
PHONE: (207)439–6023 FAX: (207)439–2128

SCALE: AS NOTED	APPROVED BY:	DRAWN BY: STB
DATE: 1/11/16		REVISION : DATE D : 8/19/16
JOB NO: C141–16	CAD FILE: WIRE ROAD DET	SHEET 5.4

LIMIT OF HISS MAPPING

APPROX. LOT LAYOUT

WIRE ROAD

SOIL TYPE BOUNDARY (TYP)

VERNAL POOL (TYP)

WETLAND BOUNDARY

LIMIT OF HISS MAPPING

APPROX. LOC. SHALLOW SOIL OBSERVATION

CrB

NaB

ALB

BrB

TSB

HIGH INTENSITY SOIL MAP LEGEND

ALB ABRAM–LYMAN COMPLEX, FINE SANDY LOAMS, 0–8% SLOPES
BrB BRAYTON FINE SANDY LOAM, 0–8% SLOPES
CrB CROGHAN LOAMY FINE SAND, 0–8% SLOPES
NaB NAUMBURG LOAMY FINE SAND, 0–8% SLOPES
TSB TUNBRIDGE–SKERRY COMPLEX FINE SANDY LOAMS, 0–8% SLOPES

THIS SOIL SURVEY COMPLIES WITH CLASS B STANDARDS AS DEFINED BY THE MAINE ASSOCIATION OF PROFESSIONAL SOIL SCIENTISTS. SEE REPORT DATED DECEMBER, 2015 FOR COMPLETE DESCRIPTION OF METHODS, SOILS AND RESULTS.

ALL TEST PITS BY MICHAEL CUOMO

WETLAND/VERNAL POOL IDENTIFICATION BY OTHERS SEE GENERAL NOTE 19 ON SHEET 1.1 FOR REFERENCE.

MICHAEL CUOMO
MAINE SOIL SCIENTIST #211

GRAPHIC SCALE
100 0 100 200 300 (FEET)

NO.	DESCRIPTION	DATE
A.	MDEP REVIEW REVISIONS.	5/12/16
	REVISIONS	

CLASS B HIGH INTENSITY SOIL SURVEY
WIRE ROAD SUBDIVISION
WIRE ROAD, WELLS, ME

FOR: HIGHPINE PROPERTIES, LLC.
P.O. BOX 339
WELLS, ME 04090

ATTAR ENGINEERING, INC.
CIVIL ◆ STRUCTURAL ◆ MARINE
1284 STATE ROAD – ELIOT, MAINE 03903
PHONE: (207)439–6023 FAX: (207)439–2128

SCALE: 1" = 100'	APPROVED BY:	DRAWN BY: STB
DATE: 3/8/16		REVISION : DATE A : 5/12/16
JOB NO: C141–16	CAD FILE: FENDERSON MASTER	SHEET 7.1

An Ordinance to Amend Chapter 145 (Land Use) of the Code of the Town of Wells to Eliminate the Enclosed Structure Requirement for Businesses in the Residential Commercial District

NOTE: Proposed additions to existing Code sections are <u>underlined</u>.
Proposed deletions of existing Code sections are ~~crossed out~~.
Other sections of the Ordinance are unchanged.

The Town of Wells hereby ordains and enacts "An Ordinance to Amend Chapter 145 (Land Use) of the Code of the Town of Wells to Eliminate the Enclosed Structure Requirement for Businesses in the Residential Commercial District" to read as follows:

<u>Part 1</u>: Article V (District Regulations), § 145-24, entitled "Residential Commercial District" is hereby amended as follows:

G. Special provisions.

(3) All business uses and related storage~~, except for the sale of vegetables, fruits, plants and natural Christmas trees and wreaths, shall be located entirely within an enclosed structure.~~ <u>shall be buffered and/or screened from roadways and abutting lots as determined by the required reviewing authority and shall meet the following standards:</u>

<u>(a) Minimum 25 foot wide landscaped buffer from a lot line abutting the right-of-way along Route 9 and Route 109;</u>

<u>(b) Minimum 15 foot wide landscaped buffer from a lot line abutting the right-of-way along Route 1;</u>

<u>(c) Minimum 15 foot wide landscaped buffer from a lot line abutting any other street right-of-way and from any abutting lot line;</u>

<u>(d) The landscaped buffer shall consist of natural trees, shrubs, grass and mulch and may include fencing;</u>

<u>(e) The landscaped buffer may be crossed by an access road and may include a sign;</u>

<u>(f) Visual screening for a residential abutter shall at a minimum consist of a solid 6 foot tall visual screen. Visual screening for a commercial abutter or for a street right-of-way shall be determined by the reviewing authority.</u>

<u>Part 2:</u> Effective Date.

This Ordinance shall take effect upon adoption by the Town Meeting.

Given under our hands this ____ day of _____, 2016.

BOARD OF SELECTMEN OF THE TOWN OF WELLS:

_____
Karl Ekstedt

_____
Kathy Chase

_____
Daniel Hobbs

_____
John Howarth

_____
Timothy Roche

Planning & Development
208 Sanford Road, Wells, Maine 04090
Phone: (207) 646-5187, Fax: (207) 646-7046
Website: www.wellstown.org

Michael G. Livingston, Town Engineer/Planner	*mlivingston@wellstown.org*
Shannon M. L. Belanger, Planning Assistant	*sbelanger@wellstown.org*

Memo

Date: July 22, 2016

To: Planning Board

From: Michael G. Livingston, Town Engineer/Planner

Re: Ordinance Change Proposal for November 2016 Town Meeting – Residential Commercial Outdoor Sales

Background:

An application was received by the Board of Selectmen on 6-7-16 by a property and business owner to amend the text of §145-24G(3). The Board of Selectmen determined that the proposal substantially met the considerations of §145-6D. The Board of Selectmen also determined that the ordinance change was in the best interest of the Town and the change should be pursued by the Town instead of the applicant. The Text Amendment Application was tabled in lieu of the Town proposing a zoning amendment to the voters.

Existing Land Use Ordinance:

145-24. G. Special provisions.

(3) All business uses and related storage, except for the sale of vegetables, fruits, plants and natural Christmas trees and wreaths, shall be located entirely within an enclosed structure.

Applicant's Proposed Changes:

145-24. G. Special provisions.

(3) All business uses and related storage, except for the sale of vegetables, fruits, plants and natural Christmas trees and wreaths <u>and the sale and storage of motor vehicles (automobiles) at sales, repair and service facilities existing as of January 1, 2016,</u> shall be located entirely within an enclosed structure.

If the proposed change is to be considered the following language changes would be recommended by the Planning Office:

145-24. G. Special provisions.

(3) All business uses and related storage, except for the sale of vegetables, fruits, plants and natural Christmas trees and wreaths and the sale and storage of motor vehicles (automobiles) at an existing licensed business service use which repairs and services motor vehicles as of January 1, 2016, shall be located entirely within an enclosed structure.

Option to consider:

Eliminate the "enclosed structure requirement in G(3) and replace with the following:

(3) All outdoor business uses and related storage shall be buffered and/or screened from roadways and abutting lots as determined by the required reviewing authority and shall meet the following standards:

- (a) Minimum 25 foot wide landscaped buffer along Route 9 & 109;
- (b) Minimum 15 foot wide landscaped buffer along Route;
- (c) Landscaped buffer shall consist of natural trees, shrubs, grass and mulch;
- (d) Screening to a residential abutter shall be a visual screen. Screening to a commercial abutter or road shall be determined by the Reviewing Authority.

Planning & Development
208 Sanford Road, Wells, Maine 04090
Phone: (207) 646-5187, Fax: (207) 646-2935
Website: www.wellstown.org

Michael G. Livingston, Town Engineer/Planner	*mlivingston@wellstown.org*
Shannon M. L. Belanger, Planning Assistant	*sbelanger@wellstown.org*

Memo

Date: May 26, 2016

To: Board of Selectmen

From: Michael G. Livingston, Town Engineer/Planner

Re: Zoning Text Change Proposal – RC Zone §145-24. G. (3)

Background:

In November 2013 the Town voted to adopt changes to §145-6 of the Land Use Code which established a procedure for a property owner in Wells to request Zoning Map or Zoning text changes. An application form and fee have been established and an application has been submitted for a Zoning Text Change. The request consists of changing language in §145-24. G. (3) to allow outdoor sales and storage of motor vehicles at locations where facilities exist that perform vehicle sales, repair and service located in the Residential-Commercial District. Currently the Code requires all business uses and related storage to be within an enclosed structure within the RC Zone. The Code also limits most buildings to 5,000 sf of gross floor area within the RC Zone.

Application Procedure:

- The Board of Selectmen should vote to receive the application per §145-6.C
  - Application submitted on April 20, 2016 with fee and escrow deposit
  - Text change does not require abutter notification
  - Applicant was notified of the BOS meeting scheduled for June 7, 2016 by mail and e-mail on May 27, 2016
- The Board of Selectmen must review the application and determine if it is in accordance with the consideration of §145-6D (1) through 6D (6).
- If the Board of Selectmen determines the change meets the general considerations, the Board must vote to send it to the Planning Board.
- After a review workshop, public hearing, and recommendations from the Planning Board, the change must return to the Board of Selectmen for a final review and scheduling of a public hearing for Town Meeting ballot consideration.

Review Materials Provided by Applicant:

- Cover Letter
- Application Form: Includes how application complies with §145-6.D (1)-(6)
- Attachment 1: Existing §145-24 RC District requirements
- Attachment 2: Proposed §145-24 RC District requirements
- Attachment 3: Tax card information, right/title to property in Wells

Review Considerations:

- Application submission requirements have been substantially met.
- See attached maps of RC Zones in the Town, orange.
- See attached Future Land Use Map from the current Comprehensive Plan
- See attached section from the current Comprehensive Plan
- §145-24 begins with the following statement:
  A. Purpose. The purpose of the Residential-Commercial Districts is to provide areas for the economic use of older residential areas along highways while preserving the character and architectural scale of the areas.
- Other properties affected: C&S Auto, Archie's Off Road Center, and Pine Needle Performance. Unclear if existing uses could expand onto abutting properties.
- The state has auto dealership requirements that include a minimum building area of 5,000 sf and a service facility.
- Considerations D.1 through D.6 have been presented by the applicant within the application form. The BOS should go through each item and make comments on each.
- The current language proposed will be difficult to administer, "..and the sale and storage of motor vehicles (automobiles) at sales, repair, and service facilities existing as of January 1, 2016.."
  The following should be considered, " ..and the sale and storage of motor vehicles (automobiles) at an existing licensed business service use which repairs and services motor vehicles as of January 1, 2016."
- A more comprehensive change would be to completely eliminate §145-24.G. (3) from the Code. (The section could be replaced, if warranted, with additional buffering requirements for outdoor businesses.)

Recommendations

1. The Board of Selectmen should review and vote on whether the application is in general accordance with the considerations of §145-6.D or if the application could be with recommended changes.

2. If yes and the applicant agrees, the Board of Selectmen should vote to place the application on the 6-20-16 Planning Board agenda.

Chapter 6 - Land Use Policies and Strategies

Introduction

The Comprehensive Plan's Land Use Policies and Strategies describe goals, policies, standards, and implementation strategies to guide the location, intensity and quality of land use in Wells over the next ten years.

Goals

State Goal:

1. Encourage orderly growth and development in appropriate areas of each community, while protecting the State's rural character, making efficient use of public services and preventing development sprawl. (Growth Management Act)

2. Safeguard the State's agricultural and forest resources from development which threatens those resources. (Growth Management Act)

Regional Goal:

(None specific to land use patterns.)

Wells Goals:

1. Wells has a balanced pattern of land use that respects its diverse natural, cultural and historic resources.

2. Encourage growth that is respectful of the Town's village, rural and beach/waterfront areas.

3. Impact of new growth on environmental, open space and fiscal resources is minimized.

4. Growth does not exceed the capacity of municipal facilities and services.

5. The identities of the Town and its neighborhoods are maintained and enhanced.

Policies

To achieve these goals, it is the policy of the Town of Wells to:

1. Promote a general pattern of development that maintains and enhances the land use and living environments of the Town including the high density beach/waterfront area, the Route 1 mixed-use corridor, the suburban style neighborhoods and the farm and forest rural areas. To accomplish this policy the Town will:
   a. Identify areas for growth that would include residential areas and areas where public infrastructure can service a high density of development;
   b. Restrict development in critical rural areas;
   c. Encourage commercial and industrial uses in appropriate locations;

d. Encourage and preserve tourism-related industry east of Route 1;
e. Preserve beach/waterfront residential neighborhoods

2. Protect and enhance Wells' small-town rural character by ensuring that new development is consistent with the character of the Town, promotes amenities that reinforce the Town's character, protects the scenic value of the Town's beaches, marshes, rivers and rural roads, and protects historic areas of the Town.

3. Consider a variety of regulatory and non-regulatory mechanisms to accommodate growth while protecting the Town's rural character.

4. Continue to monitor and manage the rate of residential growth to ensure that such growth does not unduly strain public facilities and services by:

   a. For the short-term, transitioning to a differential growth cap system that directs more residential growth into areas designated as growth and transitional areas;
   b. For the longer-term, establishing a committee to study alternative methods of managing growth and financing public improvements required by new growth. These methods may include Transfer of Development Rights (TDR), Purchase of Development Rights (PDR), Impact Fees or other innovative planning tools.

5. Encourage higher standards for infrastructure development in the Town's commercial and municipal center in the Route 1/109 area.

6. Direct growth into areas designated in the Future Land Use Plan as growth or transitional areas.

7. Manage residential development outside of village areas to assure it is consistent with the character of Wells by:
   a. Adopting and revising land use regulations that recognize the capacity of natural and man-made systems within the Town;
   b. Restricting development in areas where public facilities such as water, sewer, and roads are not available or are not adequate to service the development unless the services are upgraded; and
   c. Requiring provision of open space and recreational lands as part of new, large subdivisions that are commensurate with the size of the development and that optimize opportunities to connect with townwide and regional open space and recreational resources.

8. Maintain and promote small-scale commercial activities and uses along the Route 1 Corridor assuring that expansion of existing commercial uses or development of new commercial enterprises adhere to the following guidelines (Per Corridor Plan adopted by the Town in April 2000):
   a. Ensuring the scale and nature of the development is compatible with adjacent uses.
   b. Encouraging signs that are consistent with the scale of the development and do not hinder views to the waterfront.

c. Instituting appropriate access management techniques to maintain a safe roadway system by minimizing curb cuts on major transportation routes.
d. Ensuring that US Route One remains with two travel lanes by promoting transportation alternatives and other traffic routes.
e. Creating a more pedestrian friendly environment through the use of raised sidewalks separated from the travel way, lighting and landscaping.

9. Direct business and industrial growth and expansion to locations that minimize impact to the Town's natural and historical environment and adjacent neighborhoods by adopting and implementing guidelines for landscaping, buffering, building design, lighting and parking.

10. Identify specific areas that could be zoned or re-zoned to accommodate light industrial or business development based upon the suitability of the area and access to arterial roadways.

11. Assure the long-term protection of land that is in forestry or agriculture through both regulatory and non-regulatory means.

12. Continue to protect, manage and enhance the Town's open space and resource conservation areas.

13. Establish new and implement existing master plans for Town-owned lands to determine their most appropriate long-term uses.

14. Examine feasibility of acquiring land for a potential future Maine Turnpike interchange in the Moody/Tatnic Road area.

15. Designate distinct "critical rural," "rural" and "growth" areas based on the guidelines of Maine's Growth Management Act.

Critical Rural Areas
Critical rural areas encompass areas in the community that contain valuable natural, historic or visual resources that are in need of a higher level of protection.

Rural Areas
Rural areas include areas of the community that:
a. Consist of large, contiguous open spaces, farmland, and forest land;
b. Are relatively free of sprawling and strip development along roads; and
c. Are not physically suitable for accommodating future high density residential or commercial uses.

Growth Areas
Growth areas include areas in one of three categories:
1. Developed Areas – Areas that are essentially built out and will only experience incremental or infill growth in the foreseeable future.

2. Existing Growth Areas - Areas already designated as residential, commercial or industrial zones on the existing zoning map that have some capacity for future growth.

3. Transitional Areas – Areas that are not part of established residential, commercial or industrial areas on the existing zoning map that:
   a. Are located in proximity to existing residential or commercial areas of Wells;
   b. Are physically suitable for development or redevelopment;
   c. Contain sufficient area to accommodate planned growth and development; and
   d. Enable a compact, clustered, rather than sprawling, pattern of development.

Definition of Land Use Districts by Type

The following table lists districts classified as non-growth and growth areas in the Future Land Use Plan.

Non-Growth Areas		Growth Areas		
Critical Rural Areas	**Rural Areas**	**Developed Areas**	**Existing Growth Areas**	**Transitional Areas**
CR 1 – Fenderson Wildlife Commons	R1 – Rural Area Previously Defined	**BB – Beach Business**	**RA – Residential A**	T1 – Moody
CR 2 – The Heath/West Brook Corridor	R2 – Chapel Road Rural Extension	**RB – Residential Beach**	**RC – Residential/ Commercial**	T2 – Community College
CR 3 – Tatnic Hills/Mt. Agamenticus Area	DR – Developed Rural	**RD – Residential Drakes Island**	**H – Harbor**	T3 – Burnt Mill
CR 4A – Branch Brook Aquifer Travel Time <200 days			**GB – General Business**	T4 – Hobbs Farm
CR 4B – Branch Brook Aquifer Recharge Area			**LI – Light Industrial**	T5 – Crediford Limited Commercial
CR 5A – Webhannet River Corridor			**QM – Quarry Manufacturing**	
CR 5B – Merriland River Corridor			**TC – Transportation Center**	
CR 5C – Ogunquit River Corridor				
CR 6 – Existing Resource Protection Districts				

RC Zone

Wells, ME

April 27, 2016

1 inch = 1000 Feet

0 1000 2000 3000

CAI Technologies

www.cai-tech.com

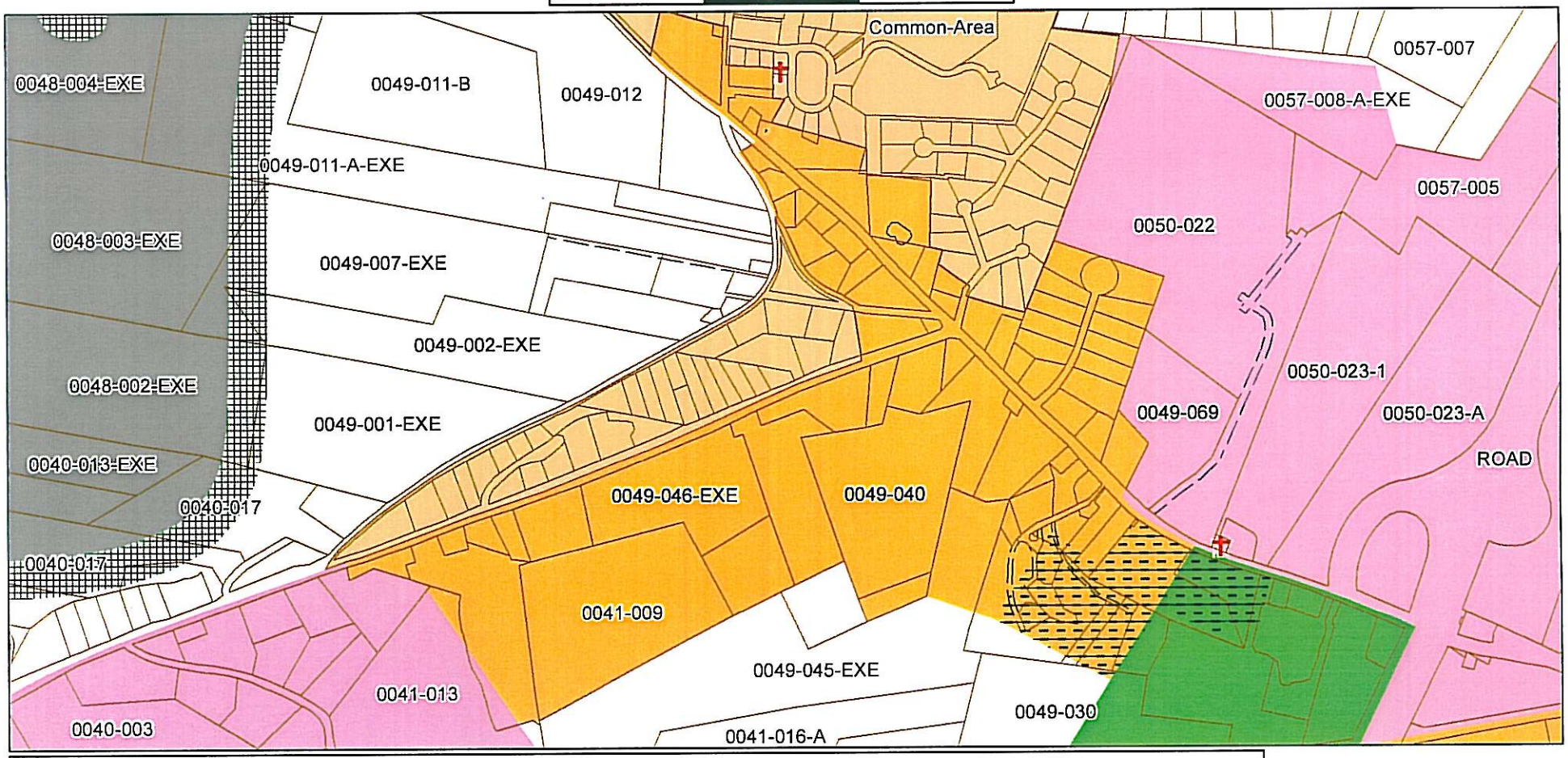

Parcel Lines - No Ortho

Cemeteries - MEGIS

R-W

Water Lines

250' Shoreland Overlay District Measured from Resource Protection District Boundary or High Water Line of Branch Brook

Mobile Home Park Overlay District

Rural (R)

Residential A District (RA)

Residential Commerical District (RC)

Resource Protection (RP)

Light Industrial District (LI)

Transportation Center (TC)

Data shown on this map is provided for planning and informational purposes only. The municipality and CAI Technologies are not responsible for any use for other purposes or misuse or misrepresentation of this map.

RC Zone

Wells, ME

April 27, 2016

1 inch = 1000 Feet

0 1000 2000 3000

CAI Technologies

www.cai-tech.com

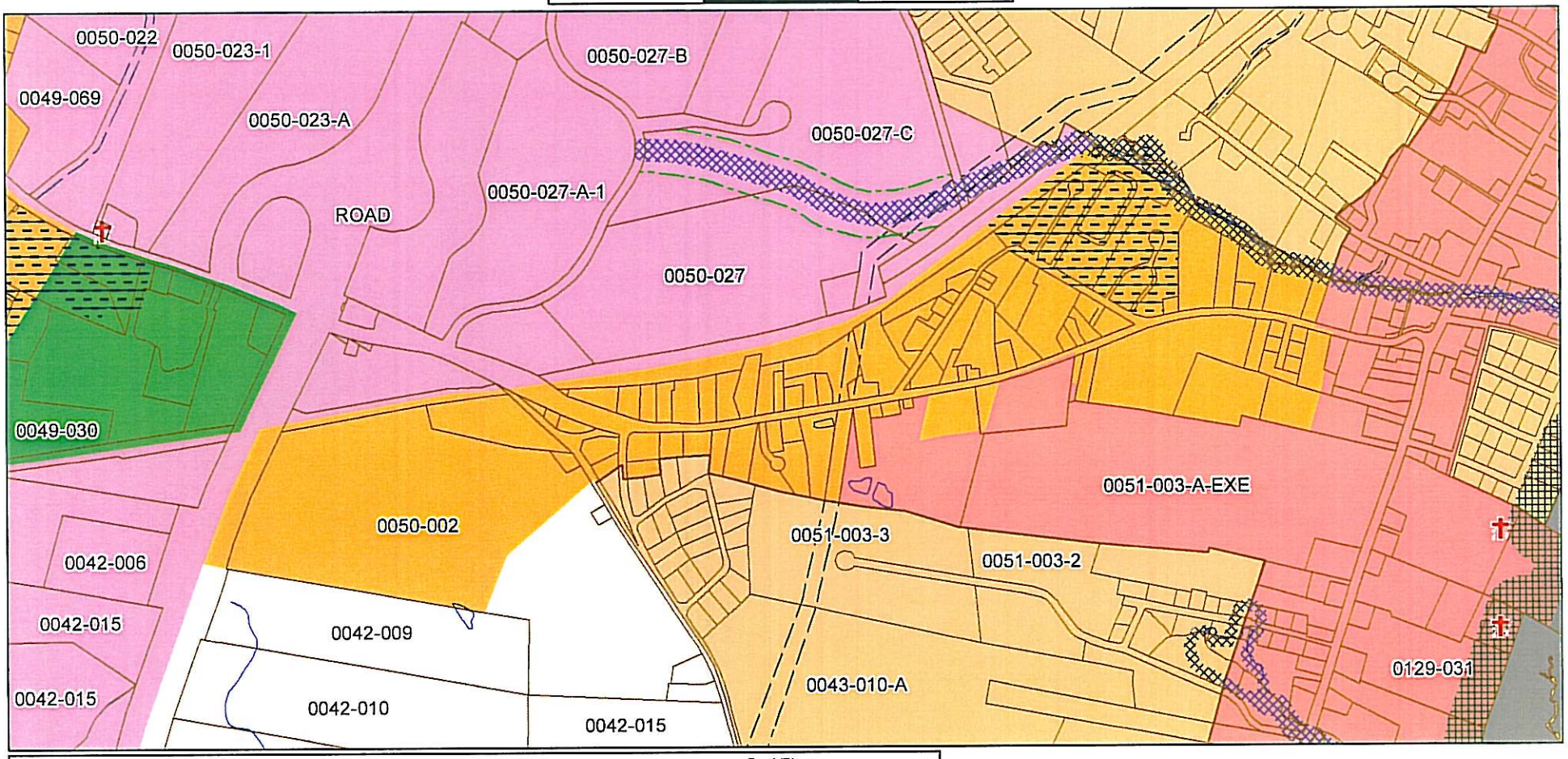

- Parcel Lines - No Ortho
- Cemeteries - MEGIS
- Conservation
- R-W
- Water Lines
- 75' Shoreland Overlay District Measured from High Water Line
- 250' Shoreland Overlay District Measured from Resource Protection District Boundary or High Water Line of Branch Brook
- Mobile Home Park Overlay District

Rural (R)

- Residential A District (RA)
- Residential Commerical District (RC)
- General Business District (GB)
- Resource Protection (RP)
- Light Industrial District (LI)
- Transportation Center (TC)

Data shown on this map is provided for planning and informational purposes only. The municipality and CAI Technologies are not responsible for any use for other purposes or misuse or misrepresentation of this map.

RC Zone

Wells, ME

April 27, 2016

1 inch = 1000 Feet

0 1000 2000 3000

CAI Technologies

www.cai-tech.com

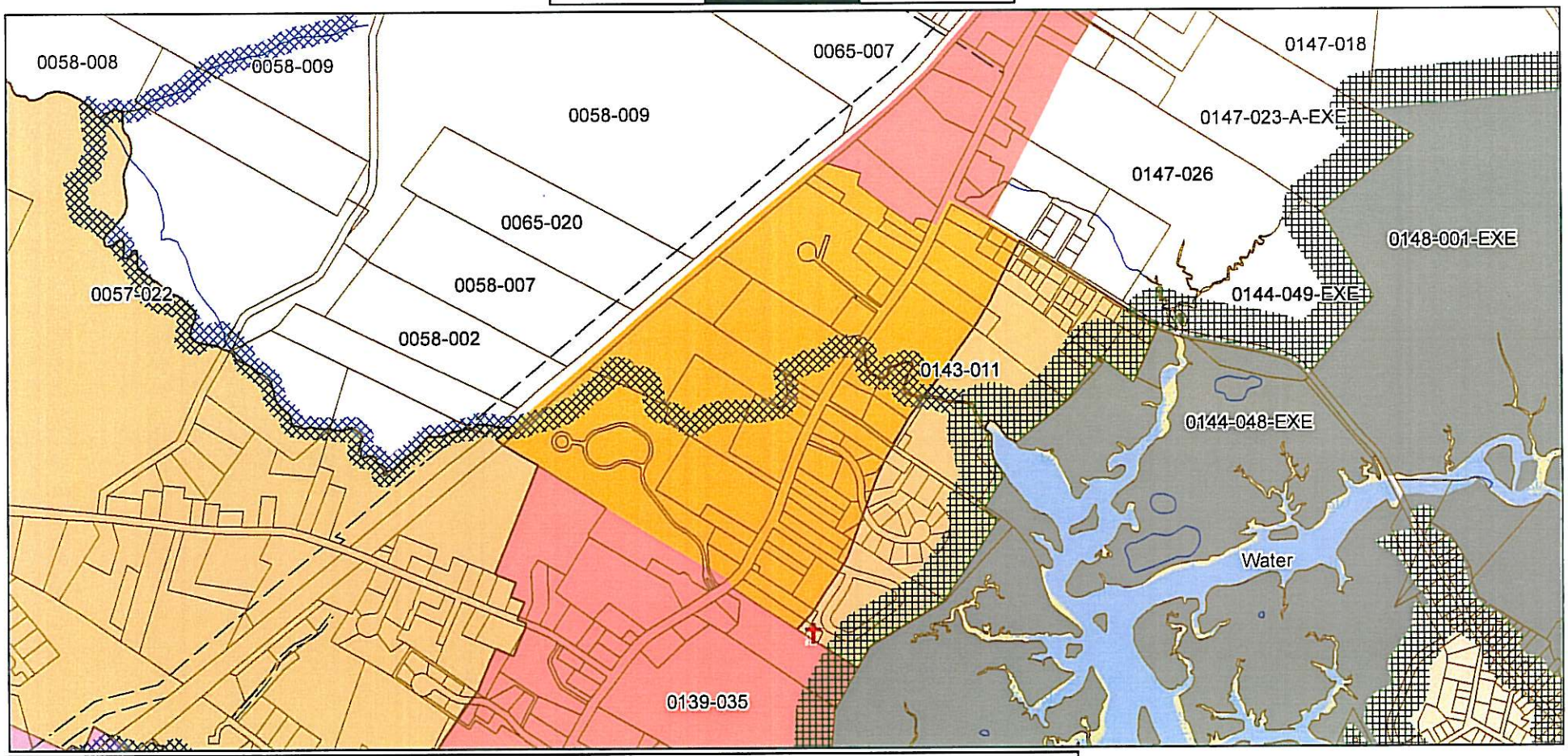

Parcel Lines - No Ortho

Cemeteries - MEGIS

R-W

Water Lines

75' Shoreland Overlay District Measured from High Water Line

250' Shoreland Overlay District Measured from Resource Protection District Boundary or High Water Line of Branch Brook

Mobile Home Park Overlay District

Rural (R)

Residential A District (RA)

Residential Commerical District (RC)

Residential D District (RD)

General Business District (GB)

Resource Protection (RP)

Light Industrial District (LI)

Data shown on this map is provided for planning and informational purposes only. The municipality and CAI Technologies are not responsible for any use for other purposes or misuse or misrepresentation of this map.

RC Zone Change

Wells, ME

April 26, 2016

1 inch = 1500 Feet

0 1500 3000 4500

www.cai-tech.com

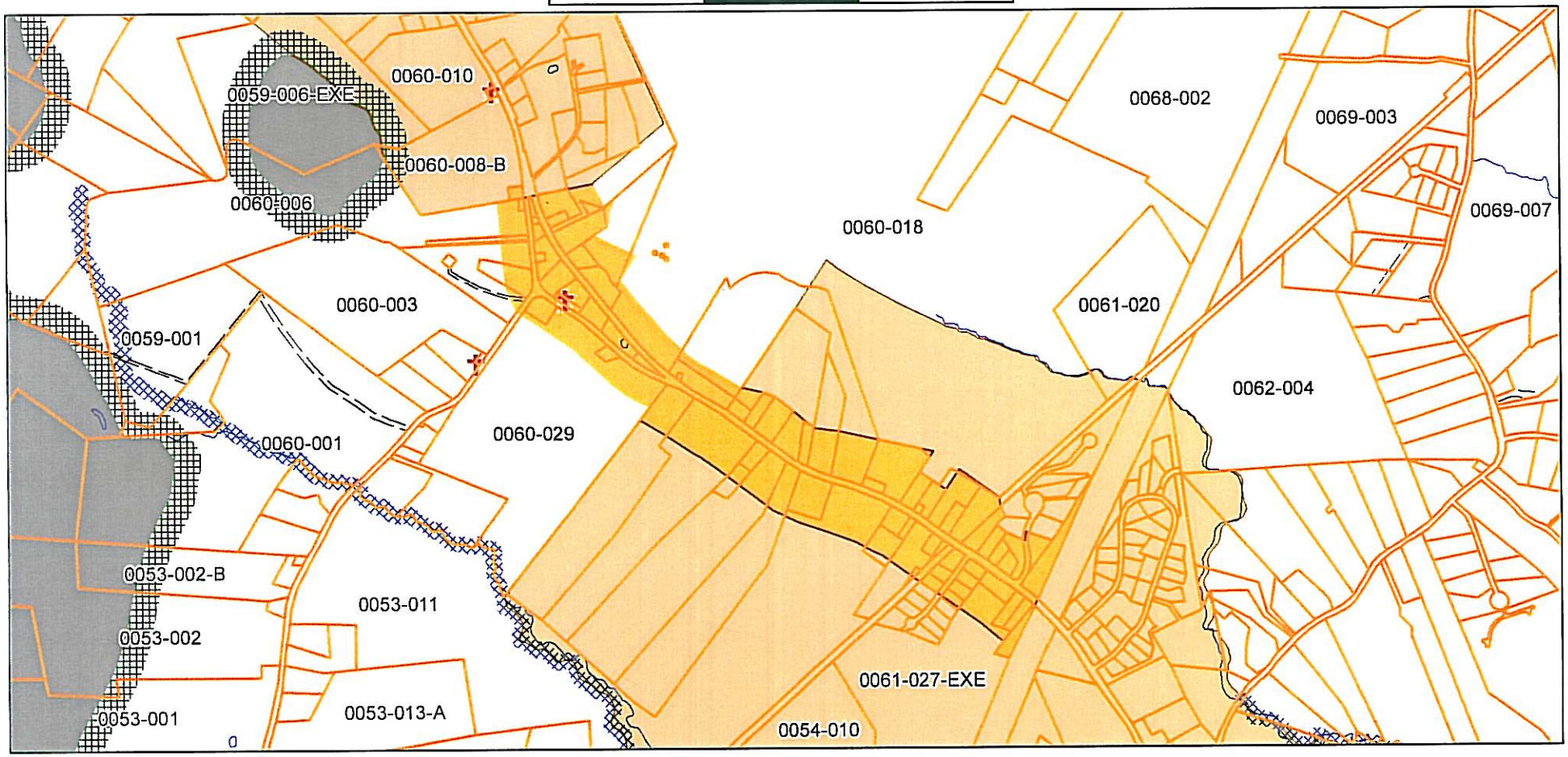

- Parcel Lines - Ortho
- Cemeteries - MEGIS
- R-W
- Water Lines
- 75' Shoreland Overlay District Measured from High Water Line
- 250' Shoreland Overlay District Measured from Resource Protection District Boundary or High Water Line of Branch Brook
- Rural (R)
- Residential A District (RA)
- Residential Commerical District (RC)
- Resource Protection (RP)

Data shown on this map is provided for planning and informational purposes only. The municipality and CAI Technologies are not responsible for any use for other purposes or misuse or misrepresentation of this map.

TOWN OF WELLS, MAINE
STAFF REVIEW COMMITTEE

Meeting Agenda
Tuesday, August 2, 2016, 9:00 AM
Town Hall Meeting Room, Second Floor
208 Sanford Road, Wells

MINUTES
July19, 2016

DEVELOPMENT REVIEW & WORKSHOP

I. **COAST 2 COAST –** Lyons Enterprises, owner; Daniel Crook, applicant. Site Plan Amendment of the 1550 SF Business Contractor use building to add Business Retail use and Neighborhood Convenience Store use (with accessory food truck with enclosed picnic table area for up to 15 seats) . The parcel is located within the Residential Commercial District and is off of 835 Sanford Road. Tax Map 49, Lot 29-1. **Receive Site Plan Amendment, Workshop Articles V, VI, VII, completeness and compliance/Findings of Fact & Decisions for possible approval**

II. **MEETINGHOUSE ROAD SUBDIVISION –** Richard Moody & Sons Construction Co, LLC, owner/applicant. Rick Licht, agent. Preliminary Subdivision Application for a 13 lot/dwelling unit major residential cluster subdivision with private road ROW and Open Space. The subdivision to be located off of 1321 Meetinghouse Road and is within the Rural District. The parcel is identified as Tax Map 77, Lot 22. **Comment on Preliminary Subdivision Application for the Planning Board**

OTHER BUSINESS

ADJOURN